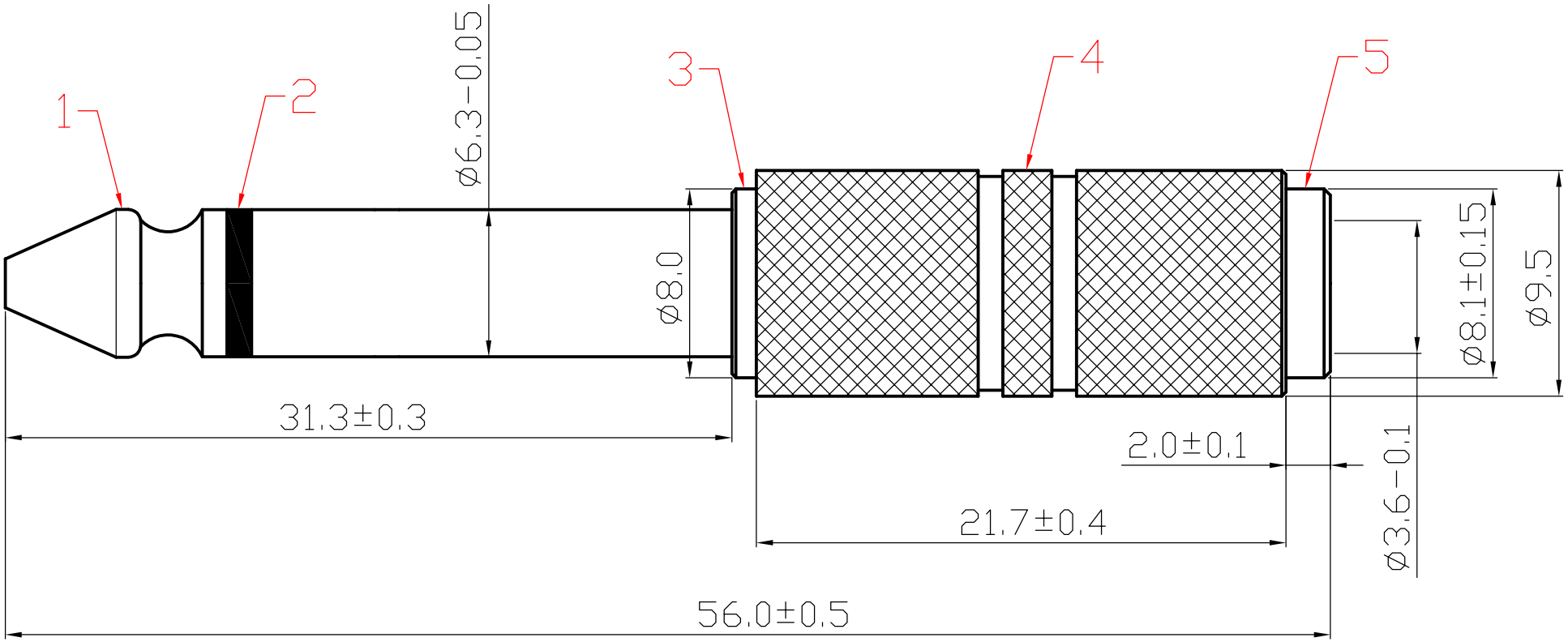

5	3.5mm Mono JACK	BRASS
4	SHELL	BRASS
3	COPPER HEAD	BRASS
2	DIELECTRIC	POM
1	FRONT POINT	Zn
ITEM	DESIGNATION	MATERIAL

TOLERANCE	
0 - 10	±0.05
10 - 99	±0.5
100 - 999	±10.0
1000 - 9999	±100.00
10000 - 99999	±1000.00

SIGNATURES	DATE
DRAFT: YangYongRui	05.11.30
CHECKEO: HuGongXue	
APPROVAL:	

大 廣 有 限 公 司
DA KOANG CO., LTD.

REV	PART NO.& SAMPLE NO.	DATE	BY
A	1140A		
B			

SHEET	SCALE	UNIT	REV
OF	1:1	mm	ø

TITLE	1/4″ Mono Plug To 3.5mm Mono Jack,Shielded
CUSTOMER	