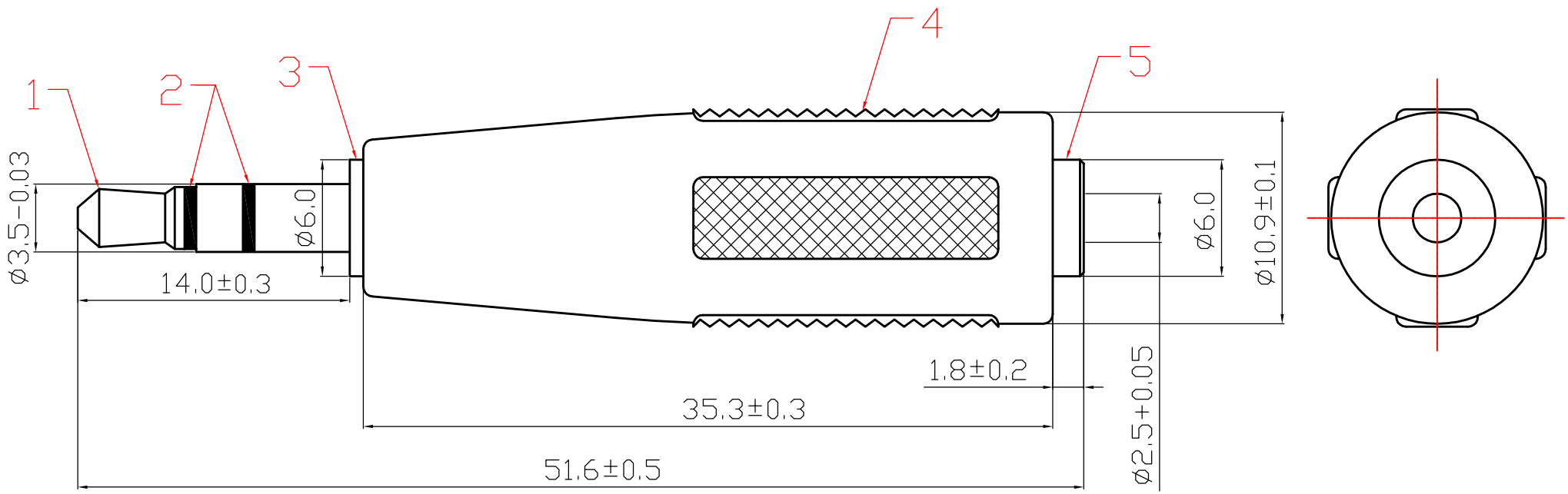

ITEM	DESIGNATION	MATERIAL
5	2.5mm STEREO JACK	BRASS
4	PLASTIC HANDLE	PVC
3	COPPER HEAD	BRASS
2	DIELECTRIC	POM
1	FRONT POINT	BRASS

REV	PART NO.& SAMPLE NO.	DATE	BY
A	1392		
B			

TOLERANCE	
0 - 10	±0.05
10 - 99	±0.5
100 - 999	±10.0
1000 - 9999	±100.00
10000 - 99999	±1000.00

SIGNATURES	DATE
DRAFT: ZHOU XIN GUO	08-03-2012
CHECKEO:	
APPROVAL:	

SHEET	SCALE	UNIT	REV
OF	1:1	mm	ø

大 廣 有 限 公 司
DA KOANG CO., LTD.

TITLE	3.5mm Stereo Plug To 2.5mm Stereo Jack
CUSTOMER	