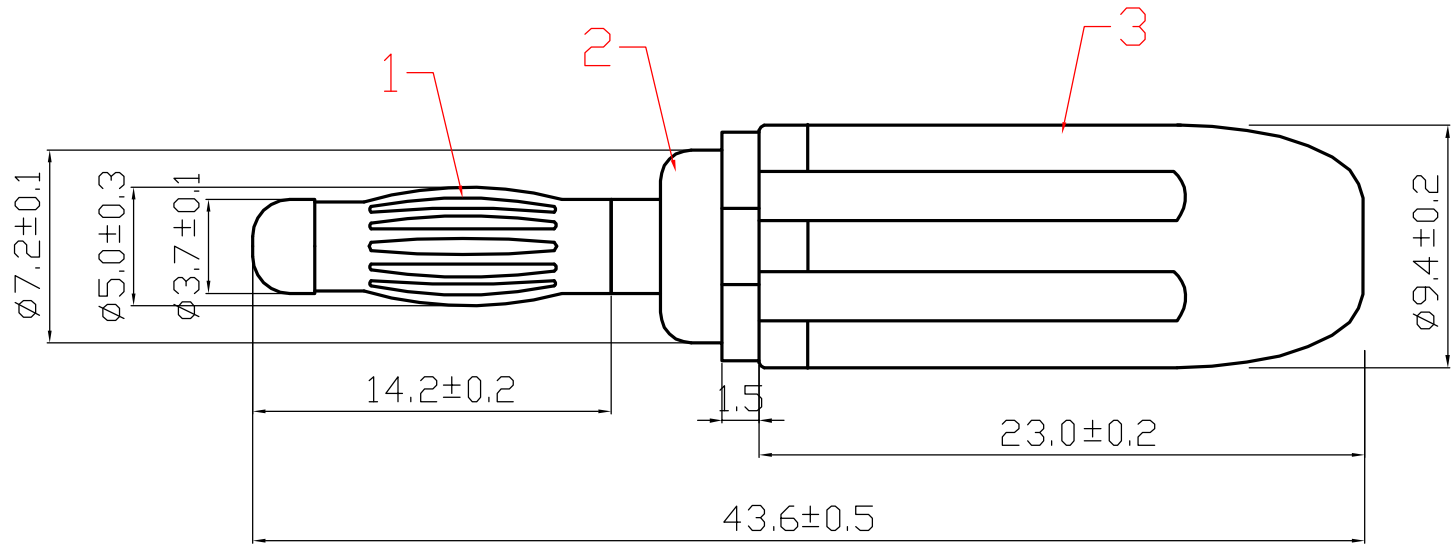

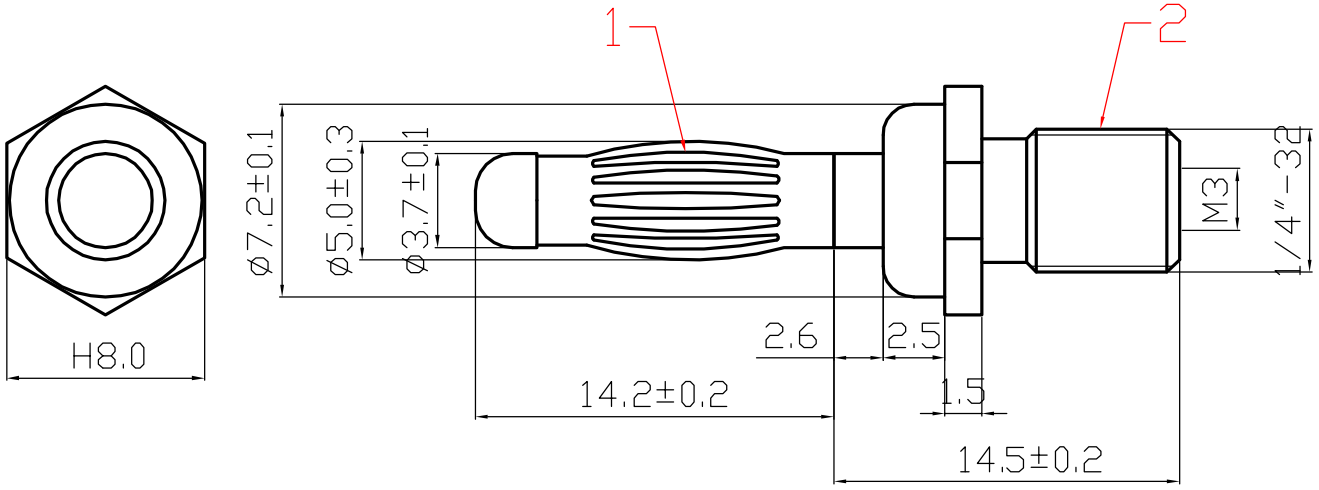

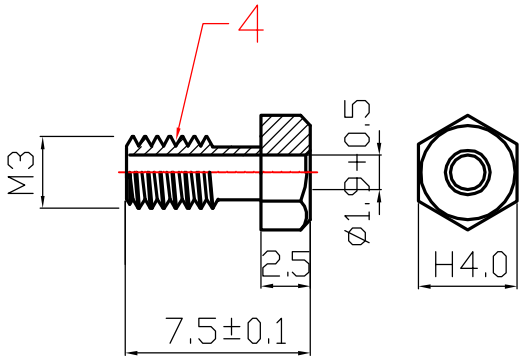

4	NUT	BRASS
3	PLASTIC HANDLE	ABS
2	BODY	BRASS
1	BANANA PLUG	BRASS
ITEM	DESIGNATION	MATERIAL

TOLERANCE	
0 - 10	±0.05
10 - 99	±0.5
100 - 999	±10.0
1000 - 9999	±100.00
10000 - 99999	±1000.00

SIGNATURES	DATE
DRAFT: ZHOU XIN GUO	12-05-2017
CHECKED:	
APPROVAL:	

大 廣 有 限 公 司
DA KOANG CO., LTD.

REV.	PART NO.& SAMPLE NO.	BY
A	1242	
B		

SHEET	SCALE	UNIT	REV.
OF	1:1	mm	ø

TITLE	Banana Plug, Screw Type(Red/Black/Yellow)
CUSTOMER	