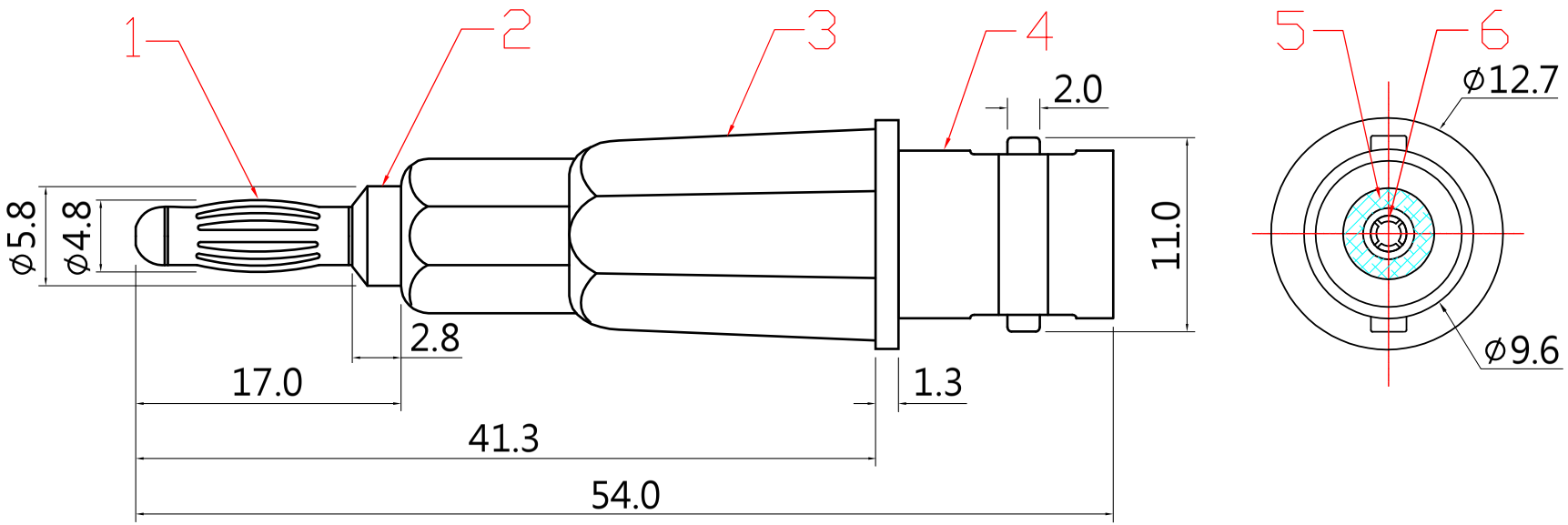

6	FEMALE PIN	RRASS
5	DIFLFCTRIC	ABS
4	BNC FEMALE	RRASS
3	PLASTIC HANDLE	PE
2	BODY	RRASS
1	CONTACT PIN	BERYLLIUM COPPER
ITEM	DESIGNATION	MATERIAL

大 廣 有 限 公 司 DA KOANG CO., LTD.

DATE	DWN	CHKD	APVD	MANAGFR
12.26.2011				

PART NAME: 4mm BANANA PLUG TO BNC FEMALE

PART NUMBER: 1262

VERSION:4.0

TOLERANCE :±0.3mm UNLESS OTHERWISE SPECIFIED

UNIT:mm

SCALE: