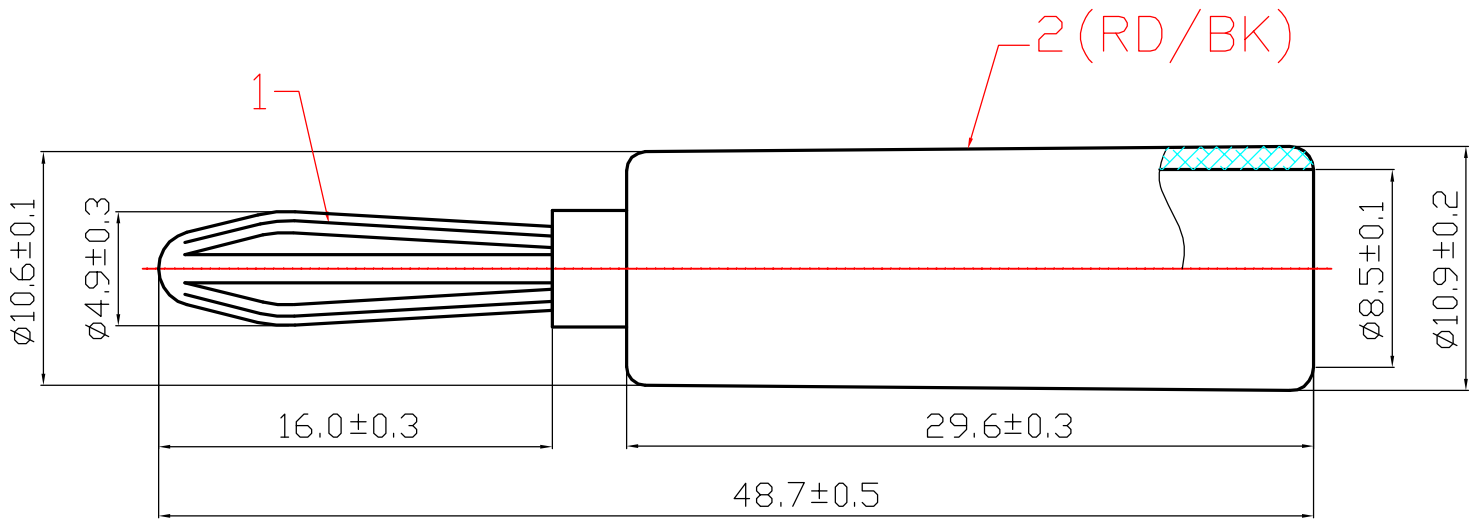

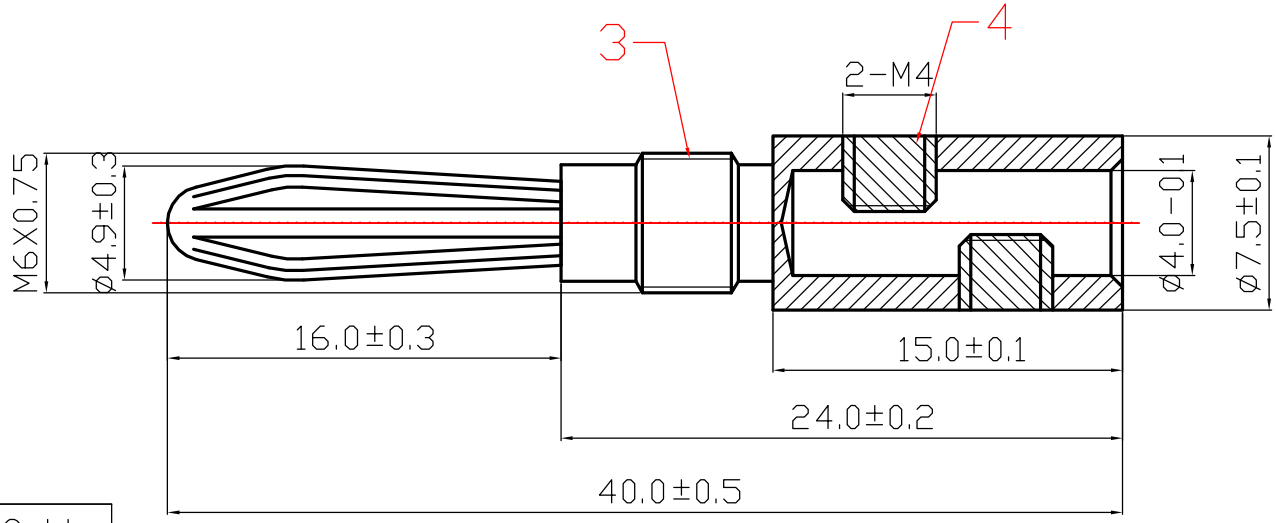

ITEM	DESIGNATION	MATERIAL	
4	SCREW	BRASS	Gold
3	BODY	BRASS	Gold
2	PLASTIC HANDLE	ABS	RD/BK
1	BANANA PLUG	BRASS	Gold

REV	PART NO.& SAMPLE NO.	BY
A	1325	
B		

TOLERANCE	
0 - 10	±0.05
10 - 99	±0.5
100 - 999	±10.0
1000 - 9999	±100.00
10000 - 99999	±1000.00

SIGNATURES	DATE
DRAFT: ZHOU XIN GUO	28-01-2014
CHECKEO:	
APPROVAL:	

SHEET	SCALE	UNIT	REV
OF	1:1	mm	ø

大 廣 有 限 公 司
DA KOANG CO., LTD.

TITLE	Banana Plug,Screw Type Plastic Handle Color:Red,Black
CUSTOMER	