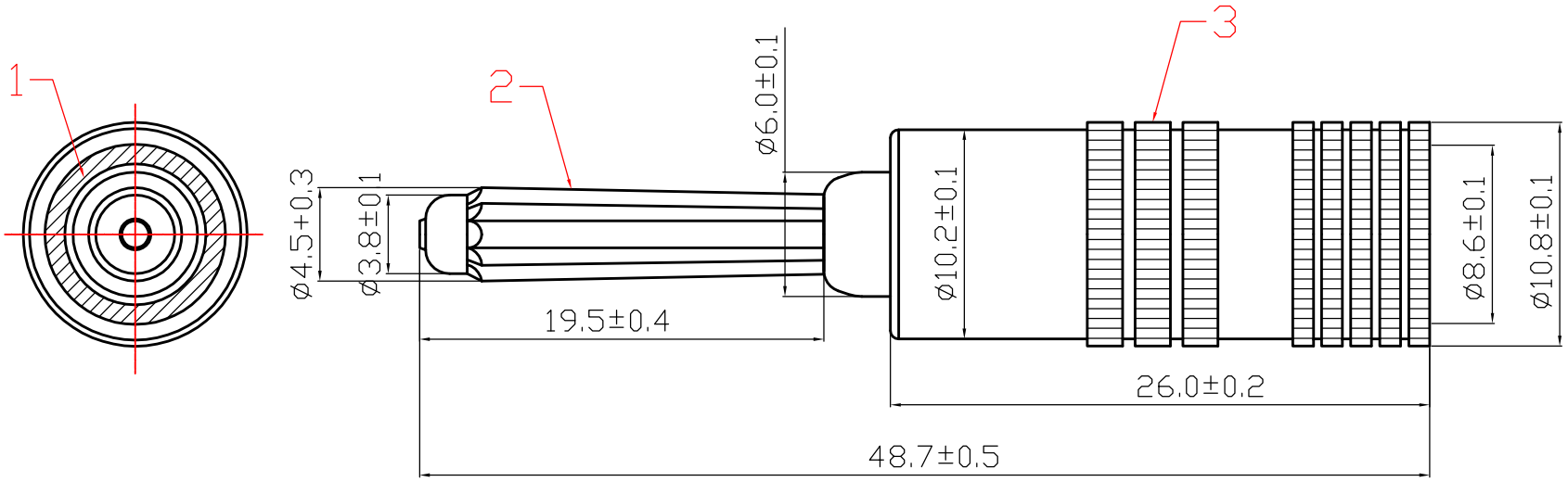

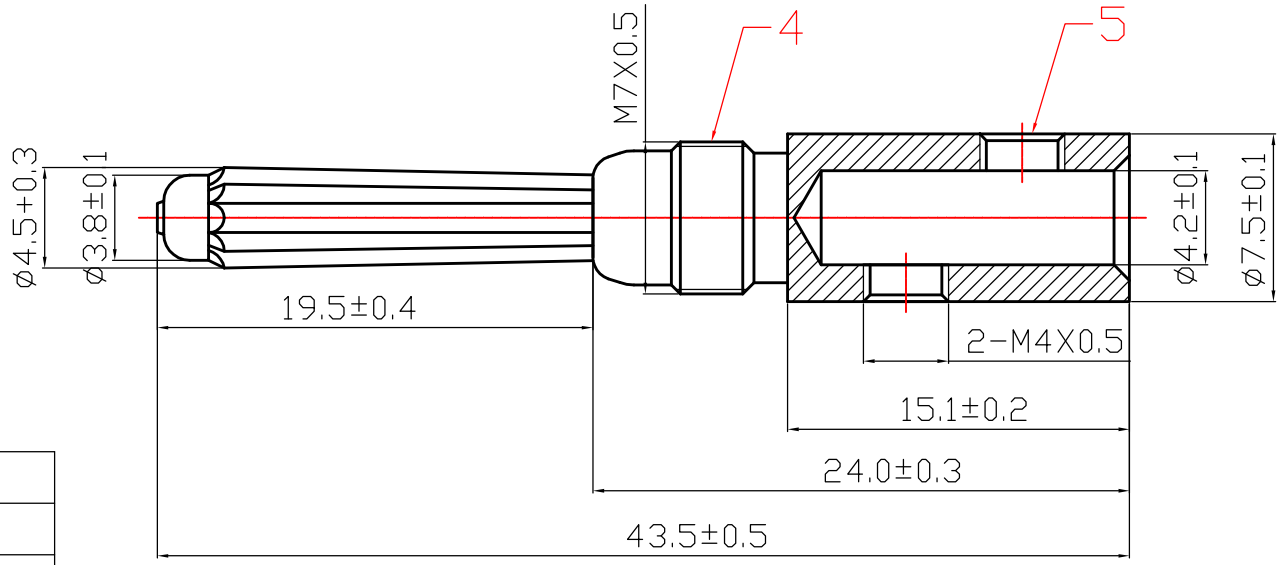

ITEM	DESIGNATION	MATERIAL
5	SCREW	Cu
4	BODY	Cu
3	SHELL	Al
2	BANANA PLUG	Cu
1	COPPER GRAIN	Cu

REV	PART NO.& SAMPLE NO.	DATE	BY
A	1445		
B			

TOLERANCE	
0 - 10	±0.05
10 - 99	±0.5
100 - 999	±10.0
1000 - 9999	±100.00
10000 - 99999	±1000.00

SIGNATURES	DATE
DRAFT: CHENG HUAN	09.03.20
CHECKEO:	
APPROVAL:	

SHEET	SCALE	UNIT	REV
OF	1:1	mm	ø

大 廣 有 限 公 司
DA KOANG CO., LTD.

TITLE	Banana Plug 7 Sticks
CUSTOMER	