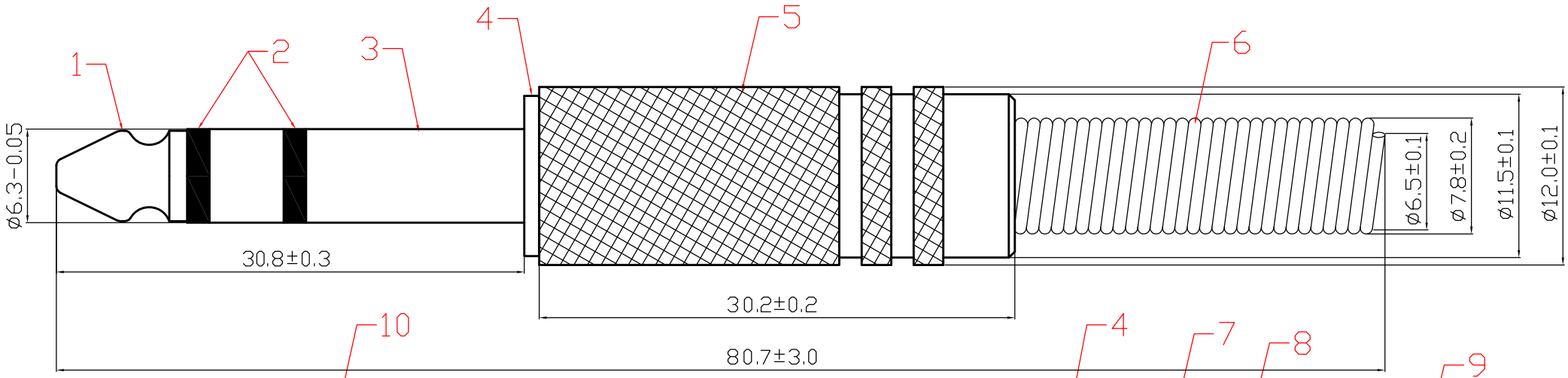

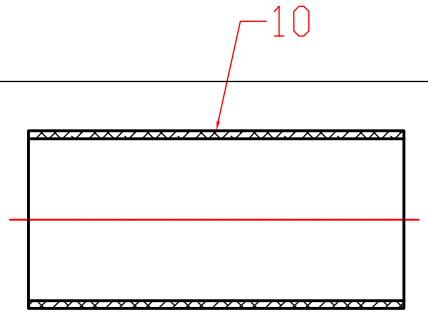

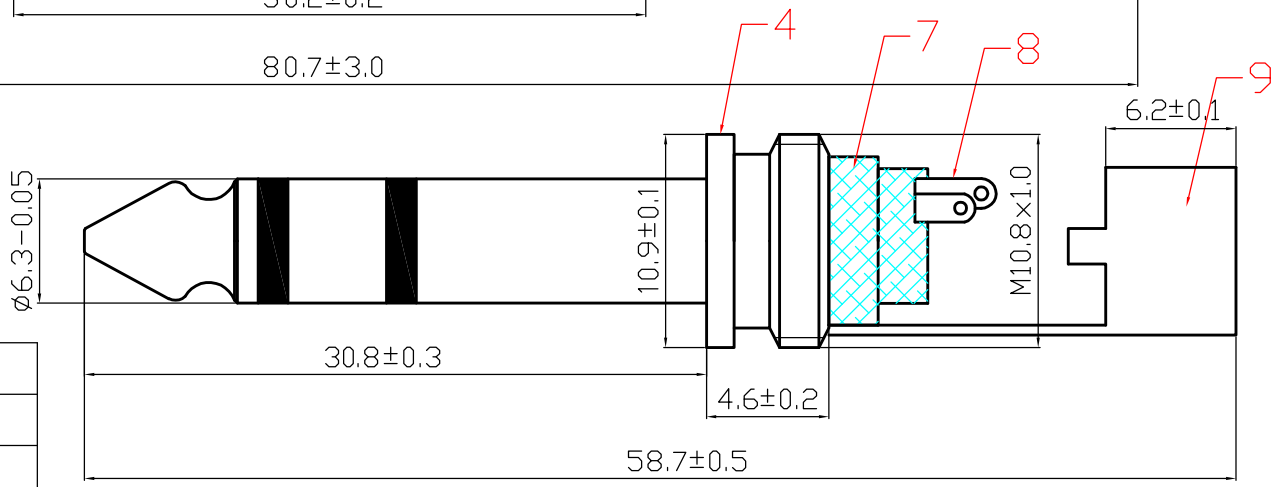

10	INSIDE HOSE	PVC
9	CRIMPING PATCH	Fe
8	SOLDERING PATCH	Fe
7	DIELECTRIC	POM
6	SPRING	Fe
5	SHELL	Zn
4	BODY	Zn
3	METAL TUBE	BRASS
2	DIELECTRIC	POM
1	FRONT POINT	Zn
ITEM	DESIGNATION	MATERIAL

TOLERANCE	
0 - 10	±0.05
10 - 99	±0.5
100 - 999	±10.0
1000 - 9999	±100.00
10000 - 99999	±1000.00

SIGNATURES	DATE
DRAFT: ZHOU XIN GUO	26-11-2012
CHECKED:	
APPROVAL:	

大 廣 有 限 公 司
DA KOANG CO., LTD.

REV.	ECO	PART NO.	DATE	BY
A		1021		
B				

SHEET	SCALE	UNIT	REV.
OF	1:1	mm	ø

TITLE	1/4″ Stereo Plug,Shieded
CUSTOMER	