	Customer (客戶名稱)			
	Prod. Series (系列名稱)		Prod. Series (承認書編號)	P1-04	MAY. 09. 08 Eric

Model Number (型號)	Rated (額定)	Insulated Voltage Proof (耐壓)
1398A	10A / 250~ 16A / 250~	3KV

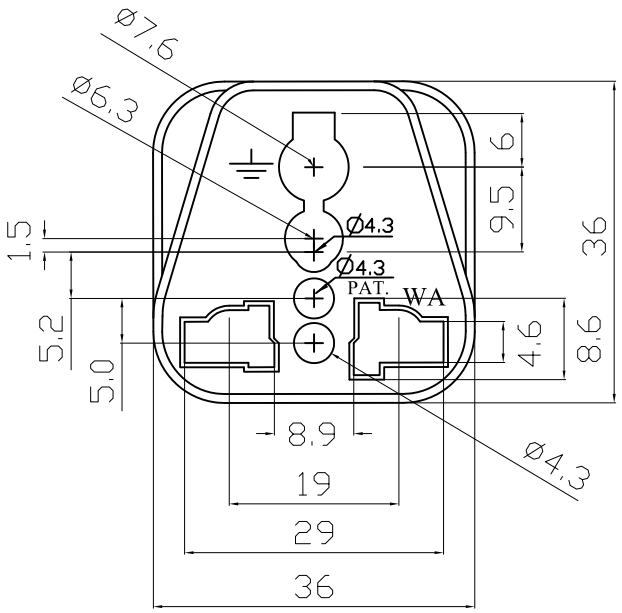

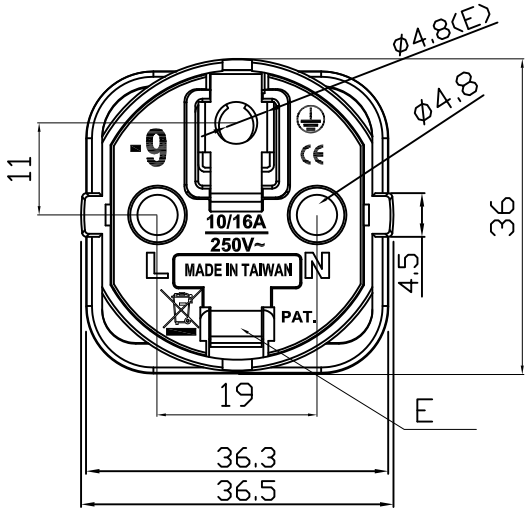

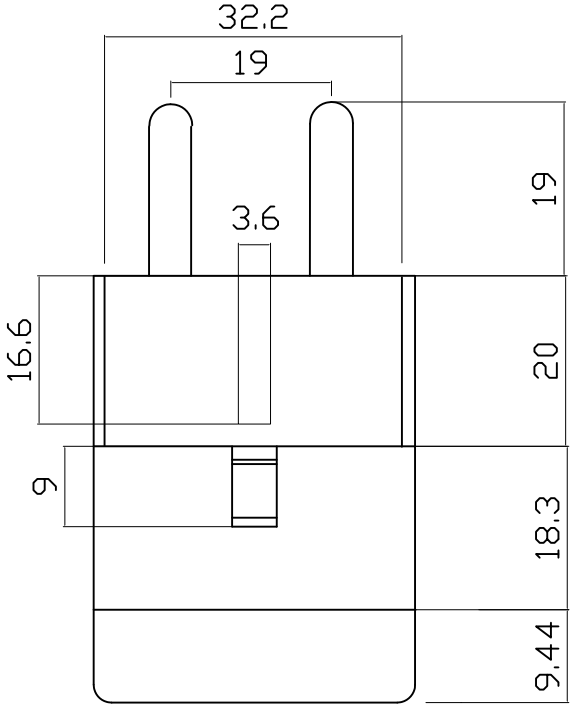

Main Material (主要材質)

NO.	Part Name (細部名稱)	Material (材質)	Specification (規格)	Certification (安規認證)
1.	Shell	PC	PC-110	E56070
2.	Plug Plate	PC	PC-110	E56070
3.	Plug Pins	Copper Bars	C-3601	
4.	Ground Plate Outet Copper	Brass Strip	C-2680	
5.	Contact Point	AL-Alloy	AL 98%	
6.				

Per Packing Case (每一包裝外箱)

Packing Mode (包裝方式)	Q'TY (數量)	N.W. (淨重)	G.W. (毛重)	CUFT (材積)
Box: pcs/box (盒裝: 個/盒)				
Blister Card (吊卡裝)				

Caution (注意事項)

1. IT DOSE NOT PERFORM VOLTAGE STEP-UP OR STEP-DOWN CONVERSION BETWEEN 125V AND 250V.
(本產品無電壓轉換之功能)
2. WHEN USE, PLEASE CHECK AND ENSURE YOUR ELECTRONICS APPARATUS CAN WORK WITH THE LOCAL VOLTAGE.
(使用本產品時，請確認你的電器產品是否適用於當地電壓)
3. WHEN MARK WITH INPUT 100V-240V, IT CAN BE USED ON THE RECHARGER LIKE PORTABLE COMPUTER, MOBILE PHONE & DIGITAL CAMERA. NO NECESS SELECT THE VOLAGE.
(一般常用之手提電腦行動電話，數位相機之充電器若有標示INPUT 100-240即可使用，無需選擇電壓)
4. WHEN DO NOT USE, PLEASE TAKE OFF AND DO NOT STAY ON THE RECEPTACLE FOR SAFE PURPOSE.
(不使用時請勿將產品留在插座上，以確保安全)

大 廣 有 限 公 司
台北市內湖區基湖路10巷46號4樓
DA KOANG CO., LTD.
4F, NO.46, LANE 10, JIHU ROAD,
TAIPEI, TAIWAN, R.O.C.
TEL : 886-2-87515735 FAX : 886-2-27988239
E-mail : da.koang@msa.hinet.net

Model Number (型號)	1398A	Description (品名)	Universal Adapter With Safety Shutter : 2P+E Ground 萬用轉接器 : 2P附側接地型	Safety Certification	Quality Certification
Suitable for Area (適用國家)	Germany,France,Indonesia,korea. (Inlay WAy) (德國,法國,印尼,韓國,嵌入式.)			CE	AFAQ EAQA UKAS QUALITY MANAGEMENT