Customer (客戶名稱)				
Prod. Series (系列名稱)		Spec. No. (承認書編號)	P1-08	Ver:A2 2002/03/28

Model Number (型號)	Rated (額定)	Insulated Voltage-Proof (耐壓)
1400A	10A/250V	3KV

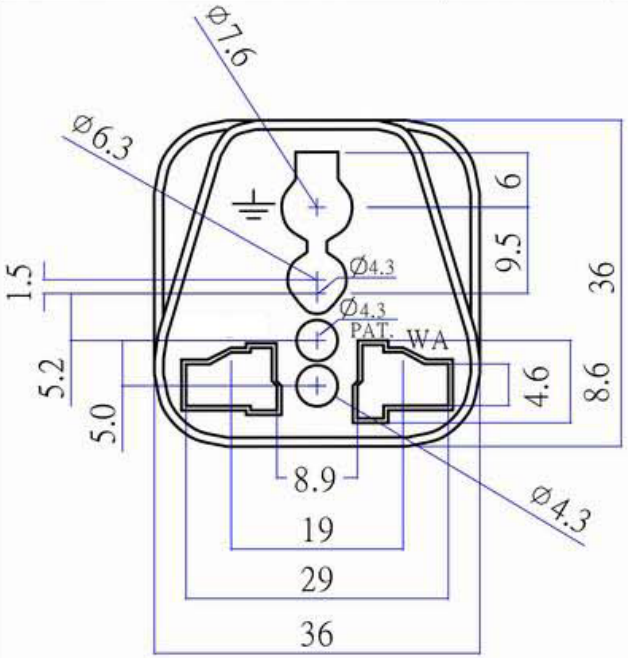

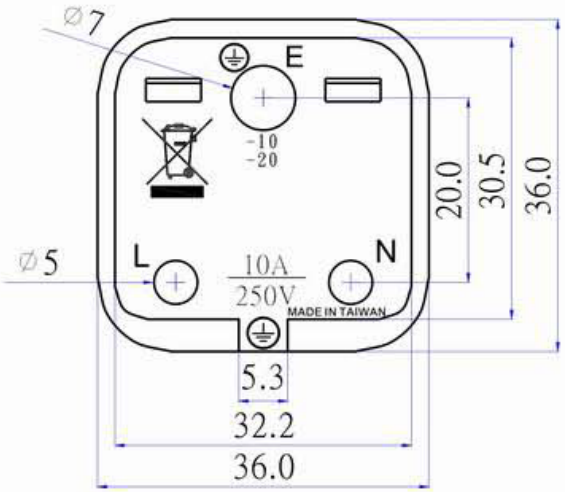

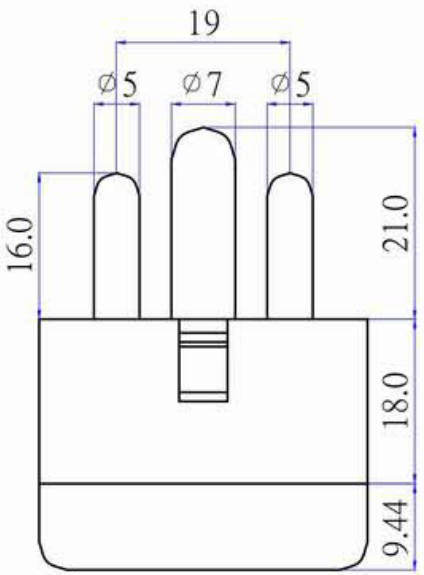

無特別標示公差者
尺寸公差均為±0.1mm

Main Material (主要材質)

NO.	Parts Name (細部名稱)	Material (材 質)	Specification (規 格)	Certification (安規認證)
1.	Shell (外殼)	ABS	PA-777D	E56070 UL-94HB
2.	Plug Plate (腳板)	Nylon-66	1300 S	E48285 UL-94V2
3.	Outlet Copper	Brass Strip	C-2680	
4.	Plug Pins	Bars Bar	C3601	
5.	Contact Copper	Brass Strip	C-2680	
6.				

Per Packing Case : (每一包裝外箱:)

Packing Mode (包裝方式)	Q'TY (數量)	N.W. (淨重)	G.W. (毛重)	CUFT (才積)
Box:10pcs/box (盒裝-10個/盒)	500	19.6	20.3	1.5
Blister Card (吊卡裝)	250	13.5	14.6	2.5

Caution : (注意事項)

1.This product is for change of plug pins only , it dose not perform voltage .
2.When use. Please check and ensure your electronics apparatus can work with the local voltage.
3.When do not use , please take off and do not stay the receptacle for safe purpose .
1.本產品僅供插腳轉換用,無電壓轉換之功能。
2.使用時,請確認電壓是否與您的產品相符。
3.不使用時請取下,勿留在插座上,以策安全。

Model number (型號)
1400A

Description (品名)	Universal Adaptor : 2P+E Ground (萬用轉接器:2P+E 接地型)
Suitable for Area (適用國家)	10A/250V :India ;5A/250V :South Africa, Hong Kong. (10A/250V:印度 ;5A/125V:南非,香港)

Safety Certification	Quality Certification
CE	ISO 9001, 2000 T-2000-282 BQR

大 廣 有 限 公 司
台北市內湖區基湖路10巷46號4樓
DA KOANG CO., LTD.
4F, NO.46, LANE 10, JIHU ROAD,
TAIPEI, TAIWAN, R.O.C.
TEL : 886-2-87515735 FAX : 886-2-27988239
E-mail : da.koang@msa.hinet.net