Customer (客戶名稱)				
Prod. Series (系列名稱)		Spec. No. (承認書編號)	P1-07	Ver:A2 2002/03/28

Model Number (型號)	Rated (額定)	Insulated Voltage-Proof (耐壓)
14045A	10A/250V	3KV

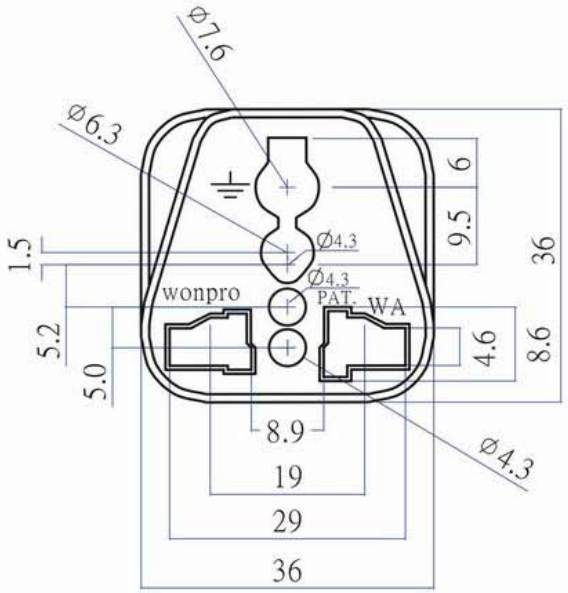

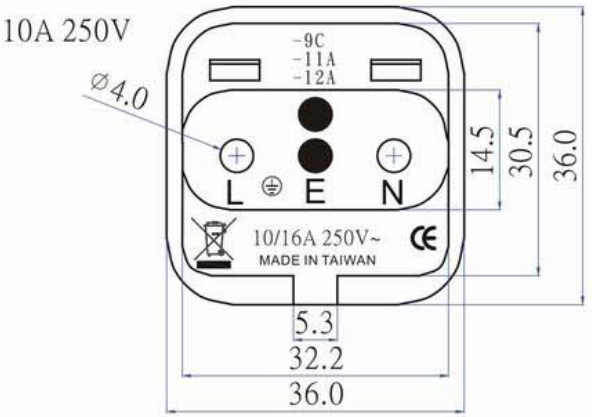

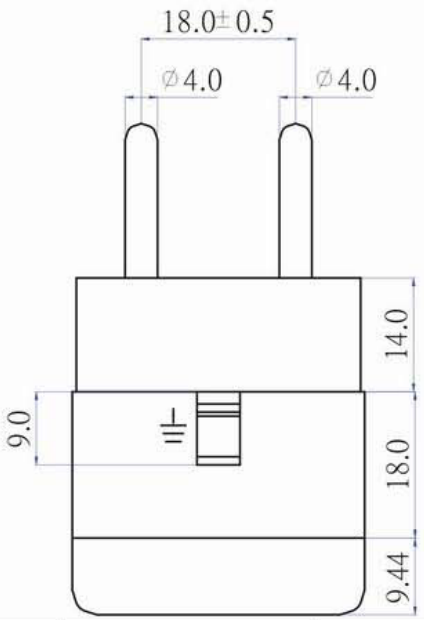

Main Material (主要材質)

NO.	Parts Name (細部名稱)	Material (材 質)	Specification (規 格)	Certification (安規認證)
1.	Shell (外殼)	ABS	PA-777D	E56070 UL-94HB
2.	Plug Plate (腳板)	Nylon-66	1300 S	E48285 UL-94V2
3.	Outlet Copper	Brass Strip	C-2680	
4.	Plug Pins	Bars Bar	C3601	
5.	Contact Copper	Brass Strip	C-2680	
6.				

Per Packing Case : (每一包裝外箱:)

Packing Mode (包裝方式)	Q'TY (數量)	N.W. (淨重)	G.W. (毛重)	CUFT (才積)
Box:8pcs/box (盒裝-8個/盒)	400	14.8	15.5	1.5
Blister Card (吊卡裝)	250	12.5	13.6	2.5

Caution : (注意事項)

1.This product is for change of plug pins only , it dose not perform voltage .
2.When use. Please check and ensure your electronics apparatus can work with the local voltage.
3.When do not use , please take off and do not stay the receptacle for safe purpose .
1.本產品僅供插腳轉換用,無電壓轉換之功能。
2.使用時,請確認電壓是否與您的產品相符。
3.不使用時請取下,勿留在插座上,以策安全。

Model number (型號)
14045A

Description (品名)	Universal Adaptor : 2P With Ground Hole. (萬用轉接器:2P 附側接地型)	Safety Certification	Quality Certification
Suitable for Area (適用國家)	Russia , U.A.E , South America (Inlay Way) (蘇俄, 中東各國, 南美各國. 嵌入式)	CE	ISO 9001, 2000 T-2000-282 BQR ANSI-RAB GMS

大 廣 有 限 公 司
台北市內湖區基湖路10巷46號4樓
DA KOANG CO., LTD.
4F, NO.46, LANE 10, JIHU ROAD,
TAIPEI, TAIWAN, R.O.C.
TEL : 886-2-87515735 FAX : 886-2-27988239
E-mail : da.koang@msa.hinet.net