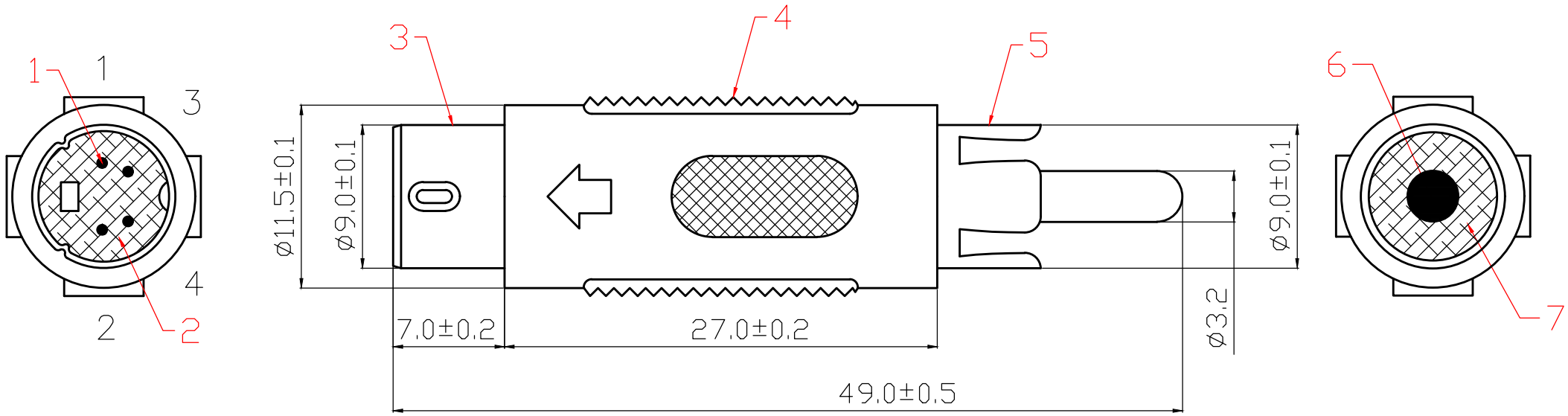

Wiring Drawing:

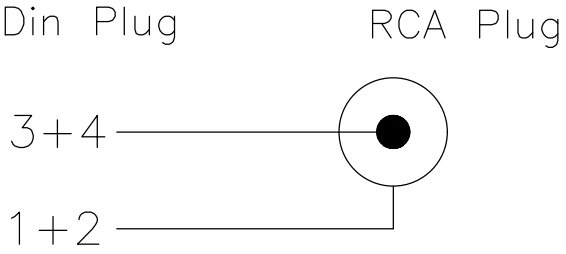

ITEM	DESIGNATION	MATERIAL
7	DIELECTRIC	BAKELITE
6	RCA MALE PIN	BRASS
5	RCA PLUG	BRASS
4	PLASTIC HANDLE	PVC
3	MINI DIN PLUG	BRASS
2	DIELECTRIC	ABS
1	MALE PIN	BRASS

REV	PART NO.& SAMPLE NO.	DATE	BY
A	1442A		
B			

TOLERANCE	
0 – 10	±0.05
10 – 99	±0.5
100 – 999	±10.0
1000 – 9999	±100.00
10000 – 99999	±1000.00

SIGNATURES	DATE
DRAFT: ZHOU XIN GUO	27-04-2012
CHECKEO:	
APPROVAL:	

SHEET	SCALE	UNIT	REV
OF	1:1	mm	ø

大 廣 有 限 公 司
DA KOANG CO., LTD.

TITLE	RCA Plug To 4P Mini Din Plug Gold Plated
CUSTOMER	