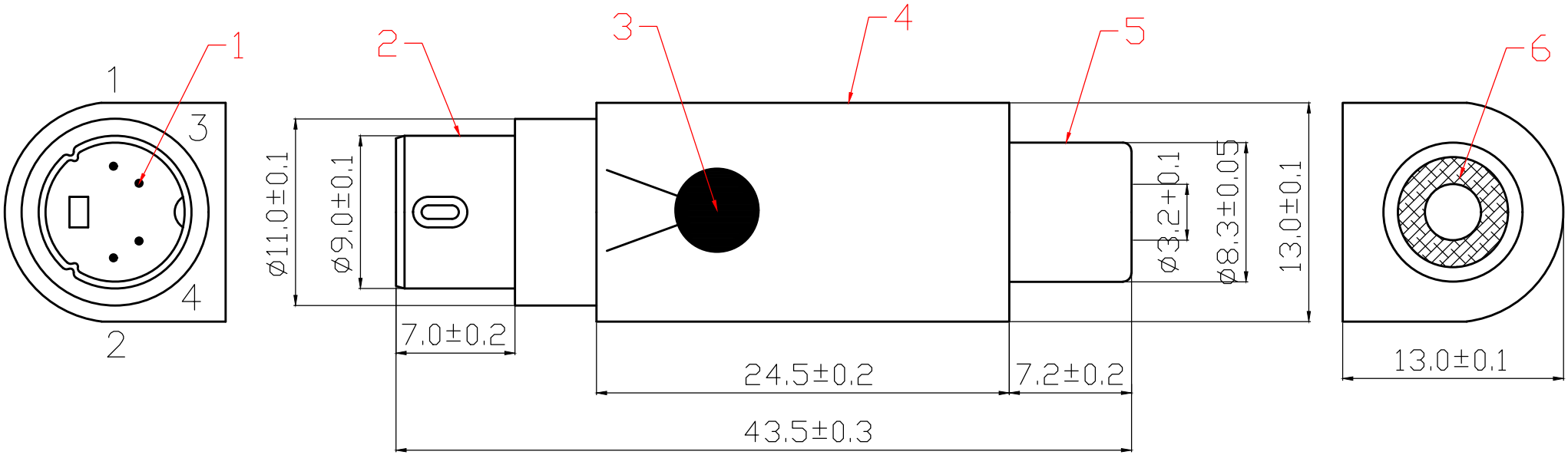

ITEM	DESIGNATION	MATERIAL	FINISH
6	DIELECTRIC	Bakelite	
5	RCA FEMALE PART	BRASS	GOLD
4	PLASTIC HANDLE	PVC	
3	CAPACITOR		
2	SHELL	BRASS	GOLD
1	PIN	BRASS	GOLD

REV	PART NO.& SAMPLE NO.	DATE	BY
A	1443		
B			

TOLERANCE	
0 – 10	±0.05
10 – 99	±0.5
100 – 999	±10.0
1000 – 9999	±100.00
10000 – 99999	±1000.00

SIGNATURES	DATE
DRAFT: YangYongRui	05.12.07
CHECKEO:HuGongXue	
APPROVAL:	

SHEET	SCALE	UNIT	REV
OF	1:1	mm	ø

大 廣 有 限 公 司
DA KOANG CO., LTD.

TITLE: 4P Mini Din Plug To RCA Jack Gold Plated

CUSTOMER