REV.	ECN NO OR DESCRIPTION	REVISED	DATE
A		Zhouyan	2014.05.08

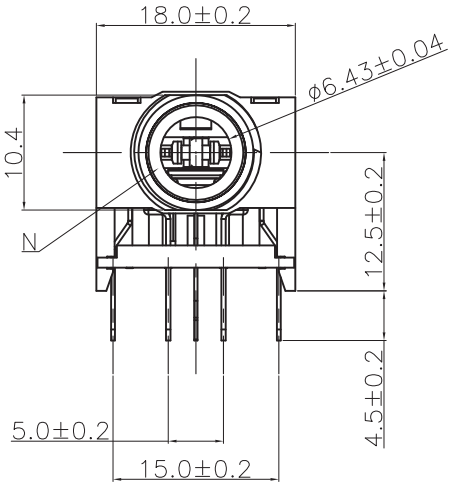

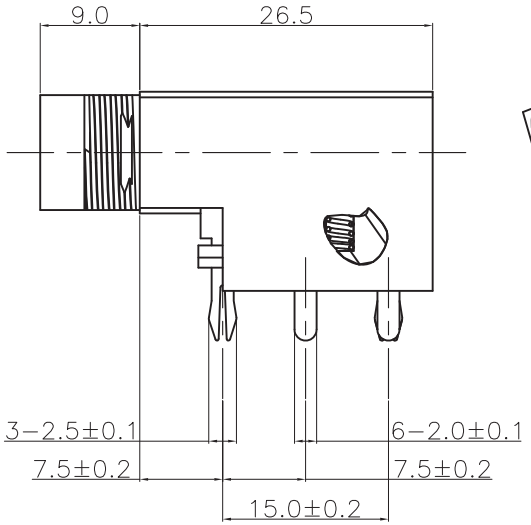

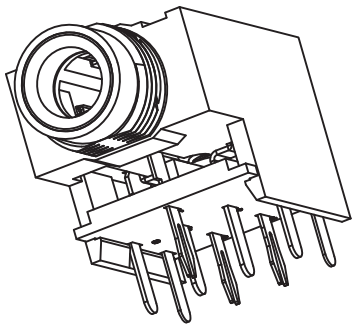

SPECIFICATIONS:

1.ELECTRICAL CHARACTERISTICS:
- 1-1. RATING: DC50V, 1.0A.
- 1-2. CONTACT RESISTANCE: 30 mΩ Max.
- 1-3. INSULATION RESISTANCE: 100 MΩ Min. MEASURED BY 500V DC.
- 1-4. DIELECTRIC WITHSTANDING VOLTAGE: 500V AC FOR 1 MINUTE.

2. MECHANICAL CHARACTERISTICS:
- 2-1. INSERTION FORCE : INITIAL 0.4-4.0Kgf.
- 2-2. WITHDRAWAL FORCE : INITIAL 0.5-4.0Kgf.

3. LIFE TEST: 5,000 CYCLES MIN.
AFTER LIFE TEST, CONTACT RESISTANCE:50mΩ MAX.

4. AFTER HUMIDITY TEST, INSULATION RESISTANCE:50MΩ MIN.

5. PART MUST COMPLY ROHS SPECIFICATION.

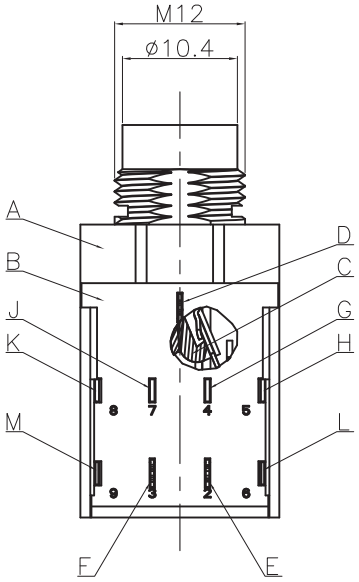

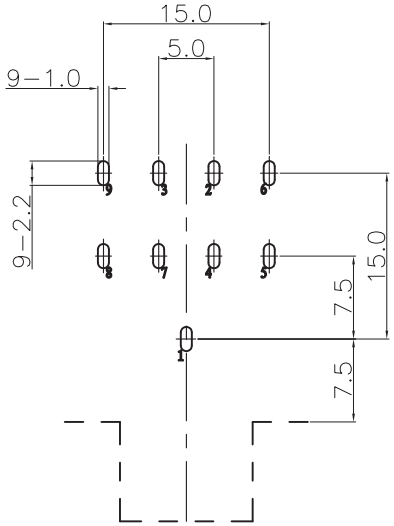

RECOMMENDED PCB LAYOUT

TOP VIEW TOL:±0.05mm

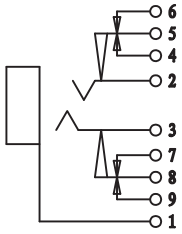

SCHEMATIC

NO.	DESCTIPTION	QTY	MATERIAL	PLATING & COLOR
N	SLEEVE	1	C3771	Ni
M	TERMINAL 9	1	C5191-EH t=0.3mm	Ag
L	TERMINAL 8	1	C5191-EH t=0.35mm	Ag
K	TERMINAL 7	1	C3712 t=0.4mm	Ag
J	TERMINAL 6	1	C5191-EH t=0.3mm	Ag
H	TERMINAL 5	1	C5191-EH t=0.35mm	Ag
G	TERMINAL 4	1	C3712 t=0.4mm	Ag
F	TERMINAL 3	1	C5191-EH t=0.3mm	Ag
E	TERMINAL 2	1	C5191-EH t=0.4mm	Ag
D	TERMINAL 1	1	C5191-EH t=0.3mm	Ag
C	INSULATOR	1	POM	BLACK
B	COVER	1	PC	BLACK
A	HOUSING	1	ABS	BLACK

UNLESS OTHERWISE SPECIFED TOLERANCES

DECIMALS: X. :±0.50 X.X :±0.30 X.XX :±0.20

ANGLES: X. :±3° X.X :±2°

大 廣 有 限 公 司 DA KOANG CO., LTD.

NAME	2049			
DWN	Zhouyan	PART NO.	139-01190002	
CHKD	Andy Yu	SCALE:1 :1	UNIT:MM	
APVD	Yu shu guang	SIZE: A4	SHEET:1 OF1	REV: A

CUSTOMER COPY