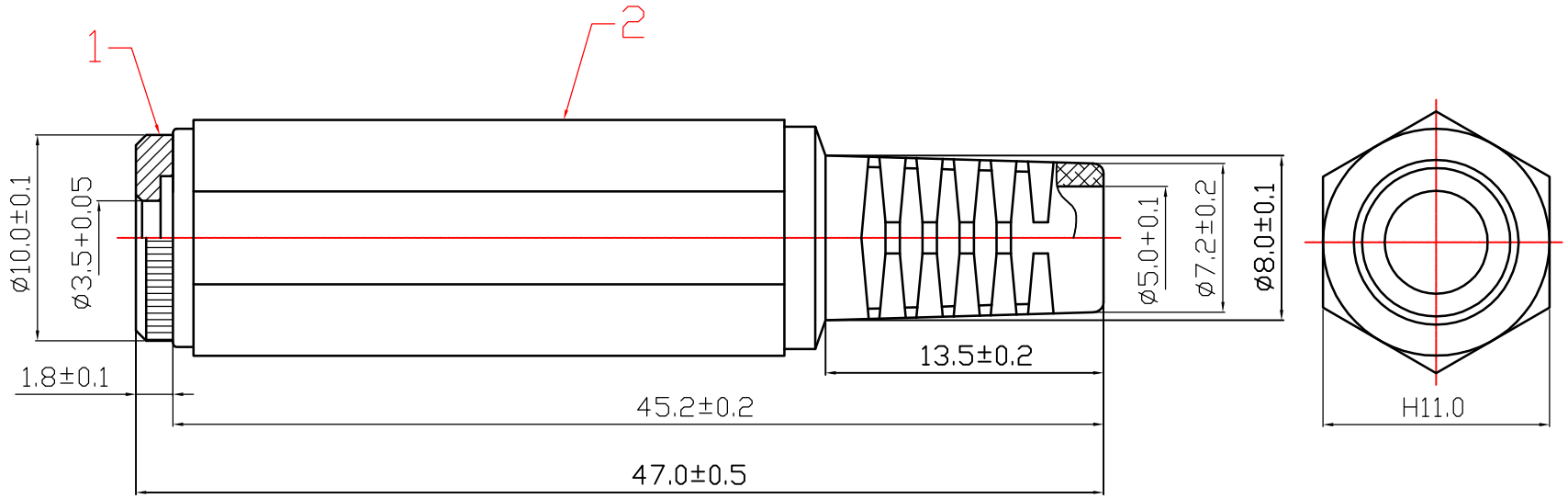

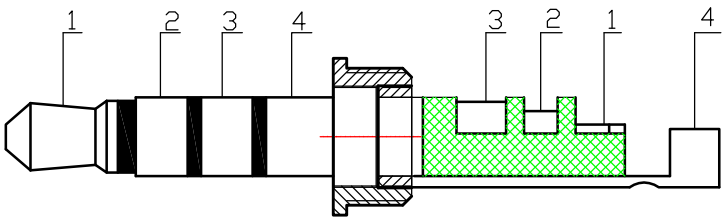

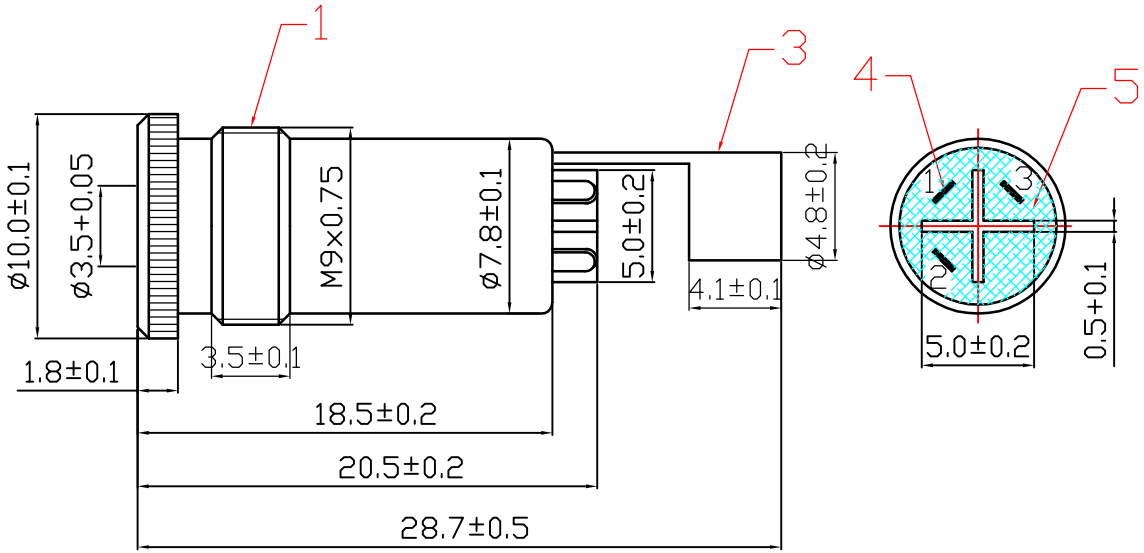

ITEM	DESIGNATION	MATERIAL
5	DIELECTRIC	POM
4	SOLDERING PIN	BRASS
3	CRIMPING PATCH	BRASS
2	PLASTIC HANDLE	PE
1	BODY	BRASS

REV	PART NO.& SAMPLE NO.	DATE	BY
A	2066		
B			

TOLERANCE	
0 – 10	±0.05
10 – 99	±0.5
100 – 999	±10.0
1000 – 9999	±100.00
10000 – 99999	±1000.00

SIGNATURES		DATE
DRAFT: YangYongRui		06.12.01
CHECKEO:HuGongXue		
APPROVAL:		
SCALE	UNIT	REV
1:1	mm	ø

SHEET OF

大 廣 有 限 公 司
DA KOANG CO., LTD.

TITLE: 3.5mm (4 Pole) Jack

CUSTOMER