SCHEMATIC	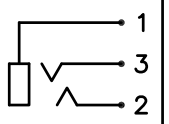
MODEX NO	X

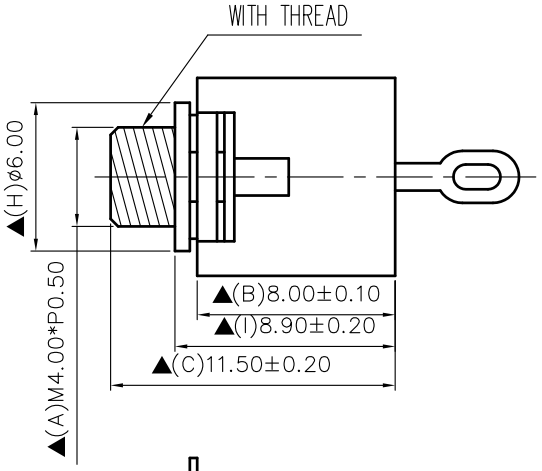

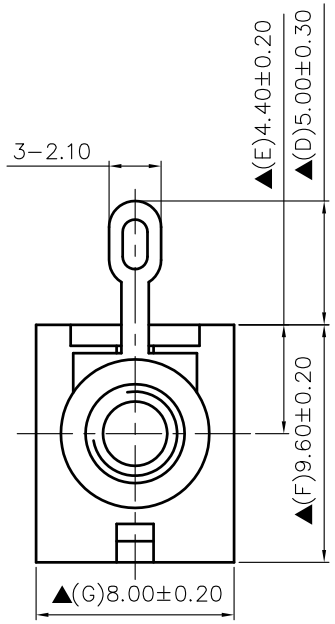

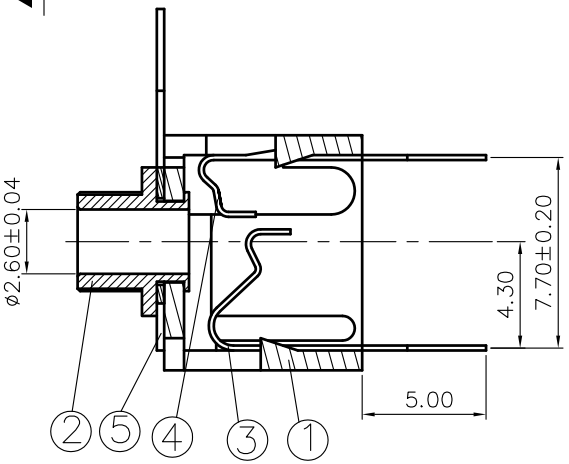

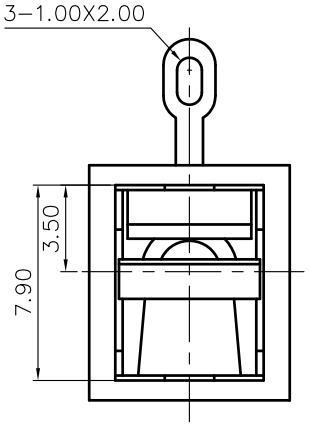

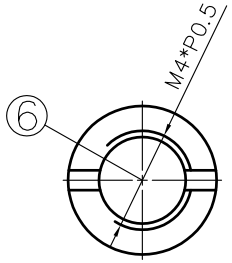

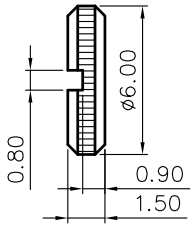

NUT

NO.	Description	Material	Q'TY	Finish
6.	Nut	1.5T Brass	1	Nickel Plated
5.	Earth Terminal	0.3T Brass	1	Silvel Plated
4.	Ring Spring	0.2T Phosphor Bronze	1	Silvel Plated
3.	Tip Spring	0.2T Phosphor Bronze	1	Silvel Plated
2.	Barrel (W/Thread)	Brass	1	Nickel Plated
1.	Housing	POM	1	Black Color

大 廣 有 限 公 司 DA KOANG CO., LTD.

DATE	DWN	CHKD	APVD	MANAGER
09.08.2011				

PART NAME : 2.5ø PHONE JACK | PART NUMBER : 2165 | VERSION:6.0

TOLERANCE :±0.3mm UNLESS OTHERWISE SPECIFIED | UNIT:mm | SCALE:/

RoHS Compliant

For Reference 僅供參考

SPECIFICATIONS:
Contact Resistance : 30mΩ max
Insulation Resistance : 100MΩ min. at DC 500V
Dielectric Withstanding Voltage: AC 500V for one minute
Remark: ▲: The Most Important Dimension