SCHEMATIC	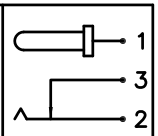
MOEL NO	C

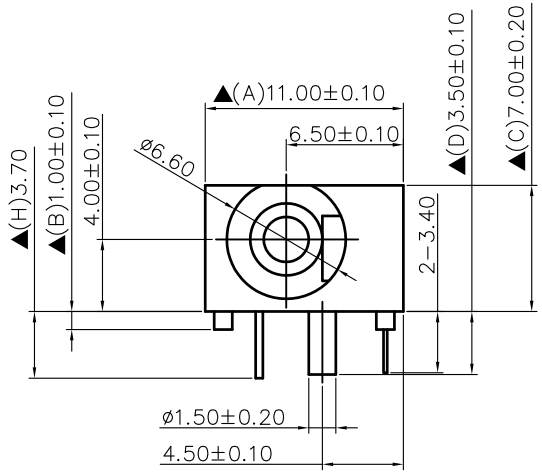

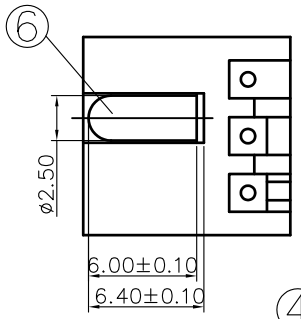

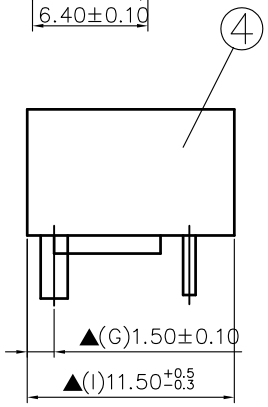

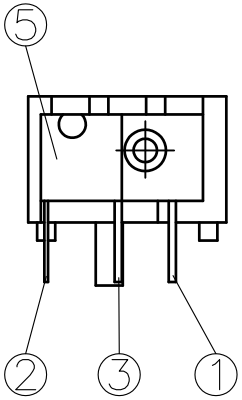

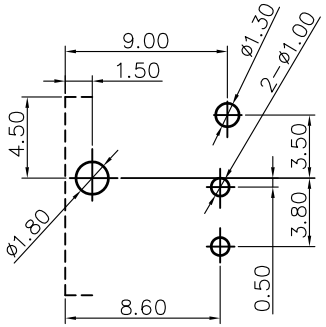

Pin Hole Layout
(Jack Bottom View)

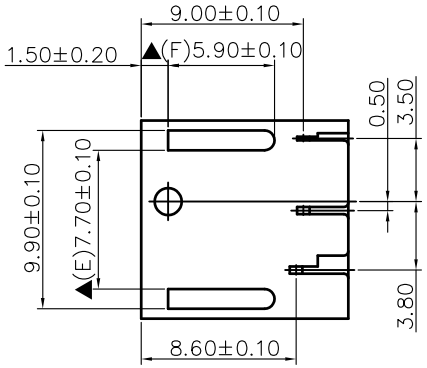

NO.	Description	Material	Q'TY	Finish
6.	Pin(2.5ø)	Copper	1	Nickel Plated
5.	Cover	PBT	1	Black Color
4.	Housing	PBT	1	Black Color
3.	Break Terminal	0.4T Brass	1	Silver Plated
2.	Sleeve Spring	0.2T TiCuR1−M−EH	1	Silver Plated
1.	Pin Terminal	0.4T Brass	1	Silver Plated

大 廣 有 限 公 司 DA KOANG CO., LTD.

DATE	DWN	CHKD	APVD	MANAGER
11.07.2012				

PART NAME: DC POWER JACK | PART NUMBER: 2058A | VERSION:7.0

TOLERANCE :±0.3mm UNLESS OTHERWISE SPECIFIED | UNIT:mm | SCALE:1/1

RoHS Compliant

For Reference 僅供參考

SPECIFICATIONS:

Contact Resistance : 30mΩ max
Current Rating : Max 5.0A , 24V DC
Insulation Resistance : 100MΩ min. at DC 500V
Dielectric Withstanding Voltage: AC 500V for one minute
Remark: ▲: The Most Important Dimension