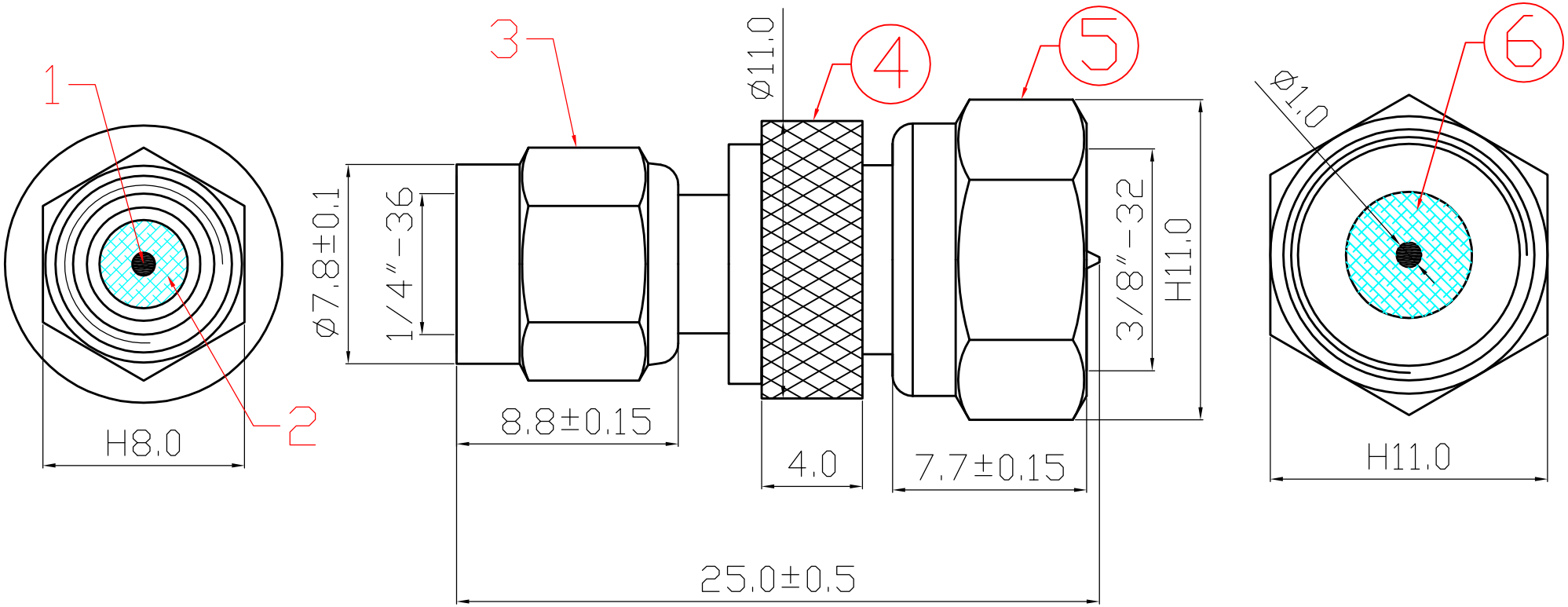

6	DIELECTRIC	POM
5	SHELL	BRASS
4	BODY	BRASS
3	SHELL	BRASS
2	DIELECTRIC	TEF
1	PIN	BRASS
ITEM	DESIGNATION	MATERIAL

TOLERANCE	
0 - 10	±0.05
10 - 99	±0.5
100 - 999	±10.0
1000 - 9999	±100.00
10000 - 99999	±1000.00

SIGNATURES	DATE
DRAFT: ZHOU XIN GUO	24-07-2015
CHECKEO:	
APPROVAL:	

大 廣 有 限 公 司
DA KOANG CO., LTD.

REV	PART NO.& SAMPLE NO.	DATE	BY
A	1258B		
B			

SHEET	SCALE	UNIT	REV
OF	1:1	mm	ø

TITLE	SMA Male To F Male
CUSTOMER	