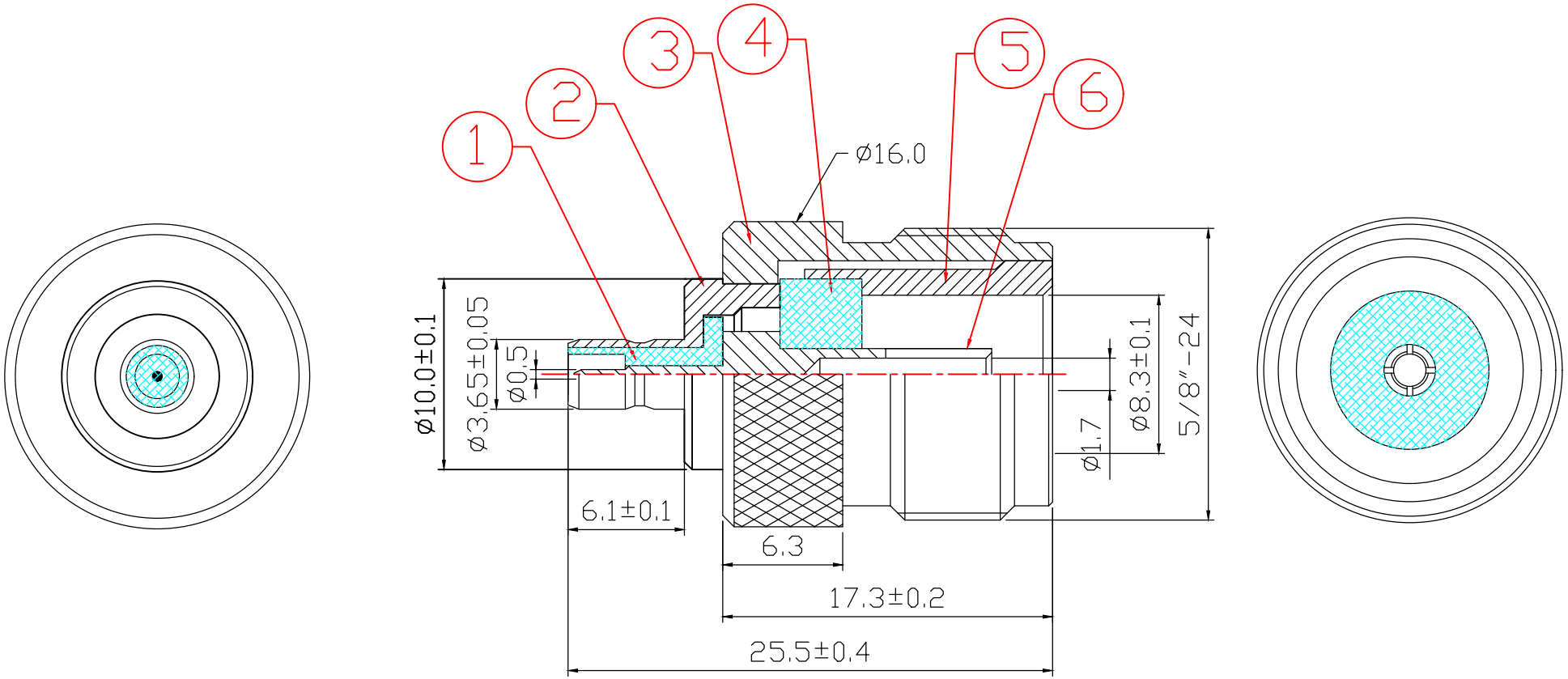

ITEM	DESIGNATION	MATERIAL
6	PIN	BRASS
5	COPPER GRAIN	BRASS
4	INSULATOR	POM
3	BODY	BRASS
2	BODY	BRASS
1	INSULATOR	TEF

REV.	ECO	PART NO.	DATE	BY
A		1494		
B				

TOLERANCE	
0 - 10	±0.05
10 - 99	±0.5
100 - 999	±10.0
1000 - 9999	±100.00
10000 - 99999	±1000.00

SIGNATURES		DATE
DRAFT: HuGongXue		06.02.11
CHECKED:		
APPROVAL:		
SCALE	UNIT	REV.
1:1	mm	ø

大 廣 有 限 公 司
DA KOANG CO., LTD.

TITLE: SMB FEMALE TO N FEMALE

SHEET OF

CUSTOMER