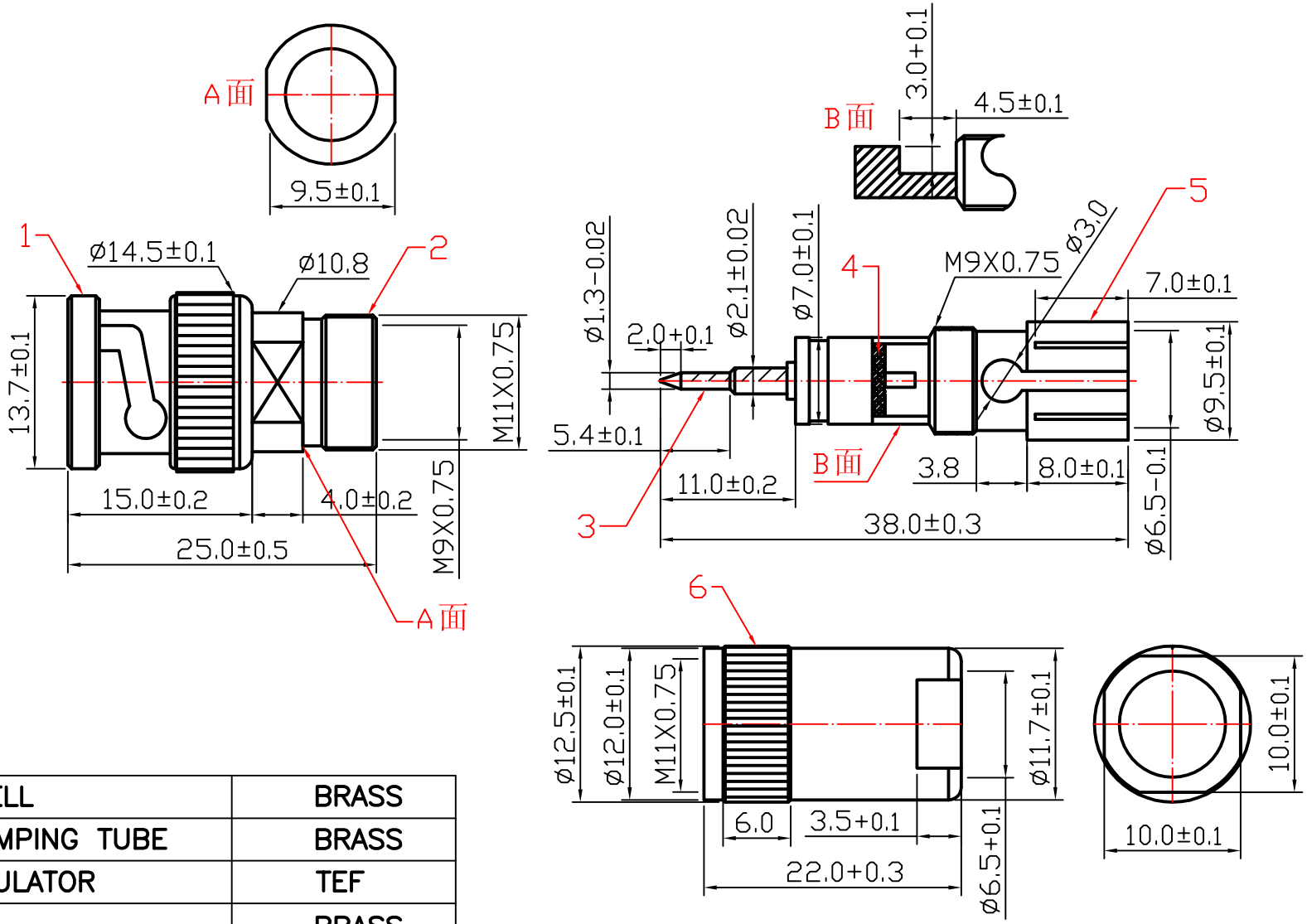

6	SHELL	BRASS
5	CRIMPING TUBE	BRASS
4	INSULATOR	TEF
3	PIN	BRASS
2	BODY	BRASS
1	BNC SHELL	Zn
ITEM	DESIGNATION	MATERIAL

TOLERANCE	
0 – 10	±0.05
10 – 99	±0.5
100 – 999	±10.0
1000 – 9999	±100.00
10000 – 99999	±1000.00

SIGNATURES	DATE
DRAFT: ZHOU XIN GUO	10.12.22
CHECKED:	
APPROVAL:	

大 廣 有 限 公 司
DA KOANG CO., LTD.

REV.	ECO	PART NO.	DATE	BY
A0		1171		
B				

SHEET	SCALE	UNIT	REV.
OF	1:1	mm	ø

TITLE: BNC Male Clamp Lock Type

CUSTOMER