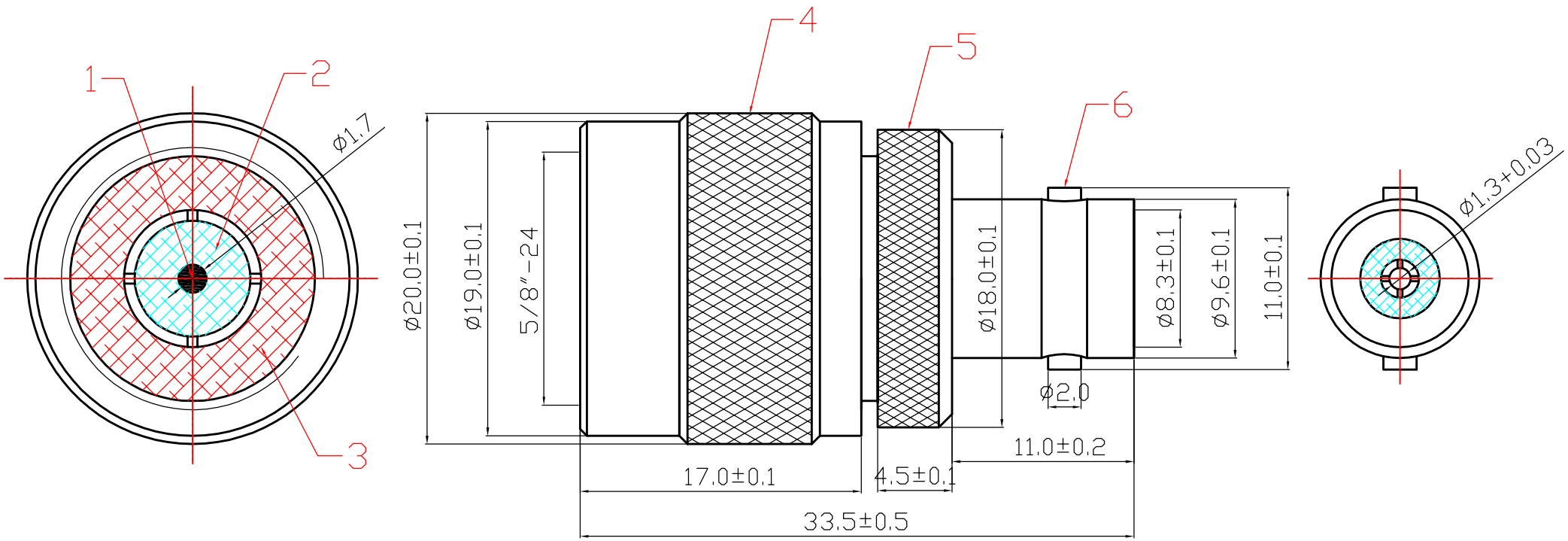

ITEM	DESIGNATION	MATERIAL
6	BNC FEMALE PART	Zn
5	BODY	BRASS
4	N SHELL	BRASS
3	RING SEALING	RUBBER
2	DIELECTRIC	POM
1	PIN	BRASS

TOLERANCE	
0 - 10	±0.05
10 - 99	±0.5
100 - 999	±10.0
1000 - 9999	±100.00
10000 - 99999	±1000.00

SIGNATURES	DATE
DRAFT: YangYongRui	06.12.13
CHECKEO: HuGongXue	
APPROVAL:	

大 廣 有 限 公 司
DA KOANG CO., LTD.

REV	PART NO.& SAMPLE NO.	DATE	BY
A	1183		
B			

SHEET	SCALE	UNIT	REV
OF	1:1	mm	ø

TITLE	N Male To BNC Female
CUSTOMER	