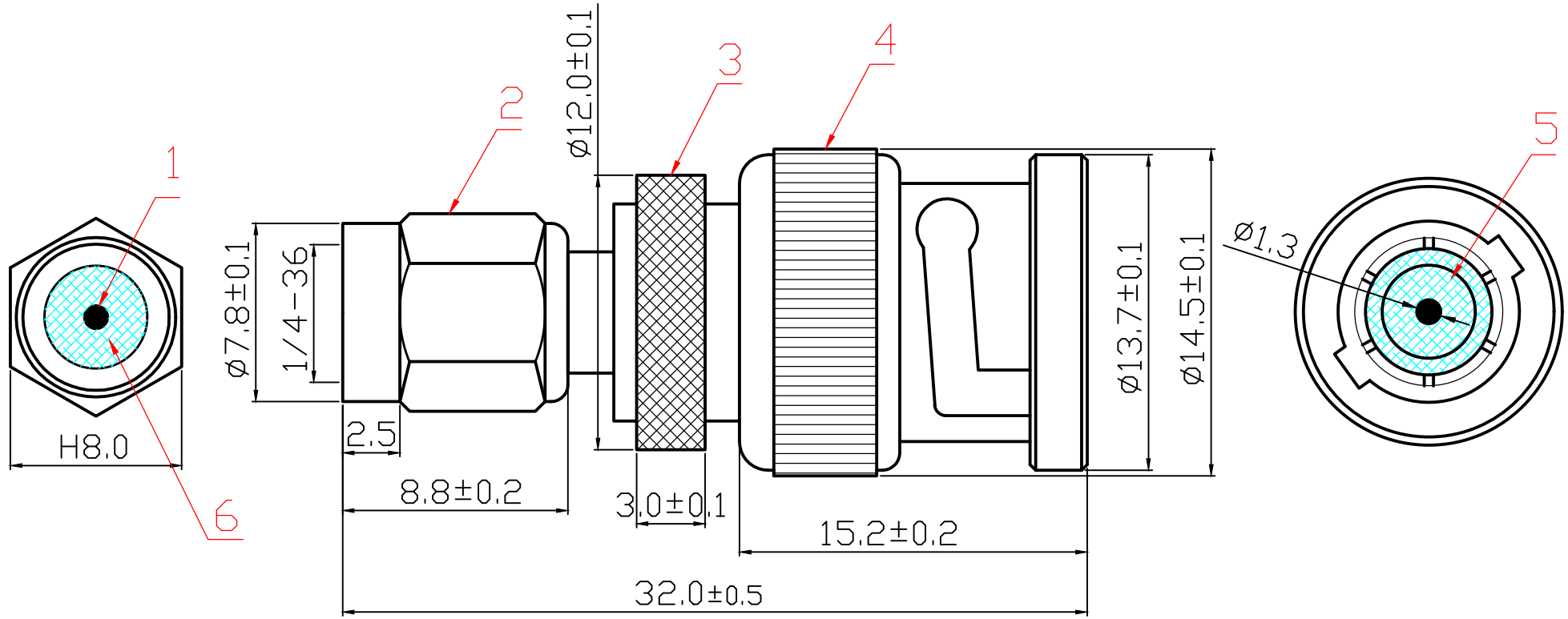


| ITEM | DESIGNATION | MATERIAL |
|---|---|---|
| 6 | INSULATOR | TEF |
| 5 | INSULATOR | POM |
| 4 | BNC SHELL | Zn |
| 3 | BODY | BRASS |
| 2 | SMA SHELL | BRASS |
| 1 | PIN | BRASS |

| REV. | PART NO.& SAMPLE NO. | BY |
|---|---|---|
| A | 1230 | |
| B | | |

| TOLERANCE | |
|---|---|
| 0 - 10 | ±0.05 |
| 10 - 99 | ±0.5 |
| 100 - 999 | ±10.0 |
| 1000 - 9999 | ±100.00 |
| 10000 - 99999 | ±1000.00 |

| SIGNATURES | | DATE |
|---|---|---|
| DRAFT: ZHOU XIN GUO | | 24-08-2017 |
| CHECKED: | | |
| APPROVAL: | | |
| SCALE | UNIT | REV. |
| 1:1 | mm | ø |

SHEET

OF

大 廣 有 限 公 司

DA KOANG CO., LTD.

TITLE: SMA Male To BNC Male

CUSTOMER