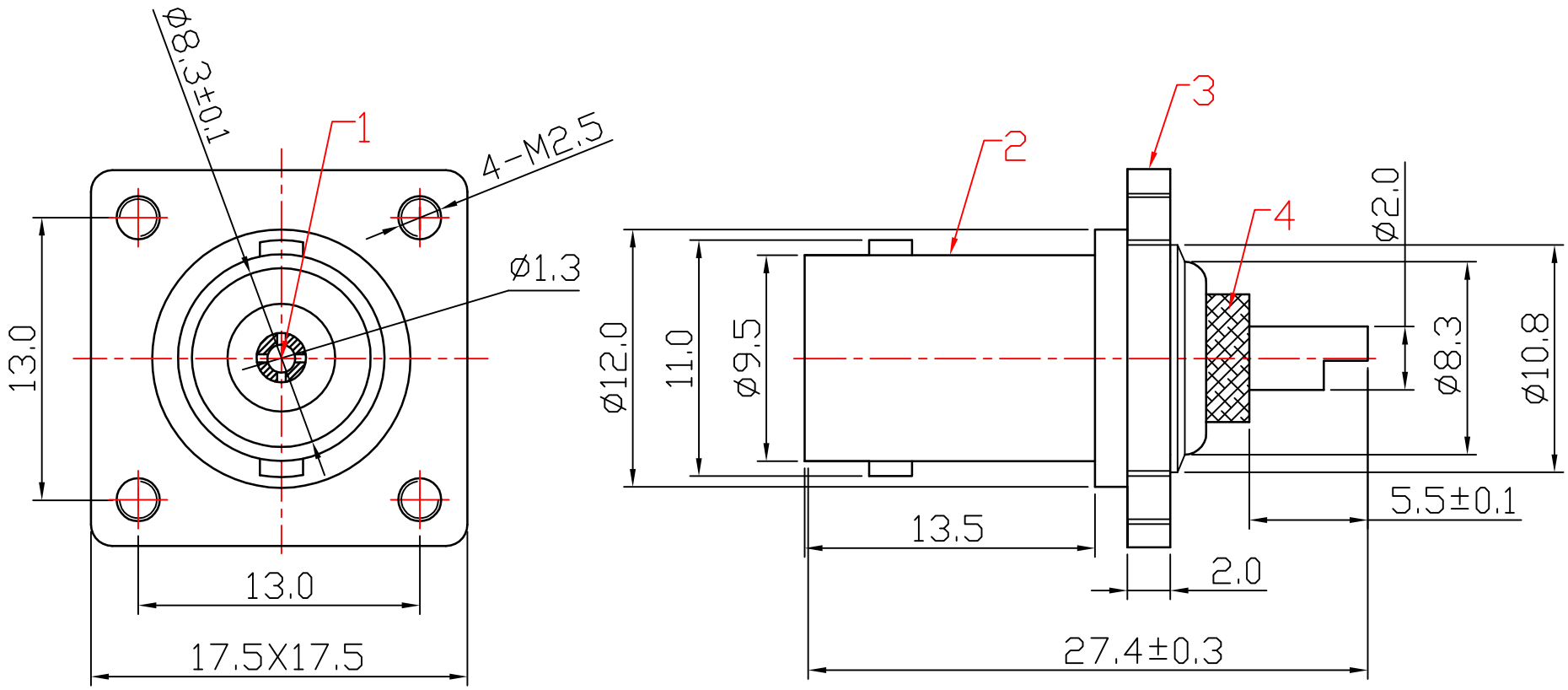

ITEM	DESIGNATION	MATERIAL
4	DIELECTRIC	POM
3	CHASSIS	BRASS
2	BNC FEMALE PART	BRASS
1	PIN	BRASS

REV.	ECO	PART NO.	DATE	BY
A0		2110		
B				

TOLERANCE	
0 - 10	±0.05
10 - 99	±0.5
100 - 999	±10.0
1000 - 9999	±100.00
10000 - 99999	±1000.00

SIGNATURES	DATE
DRAFT: ZHOU XIN GUO	10.12.02
CHECKED:	
APPROVAL:	

SHEET	SCALE	UNIT	REV.
OF		mm	ø

大 廣 有 限 公 司
DA KOANG CO., LTD.

TITLE: BNC Female Chassis Mount

CUSTOMER