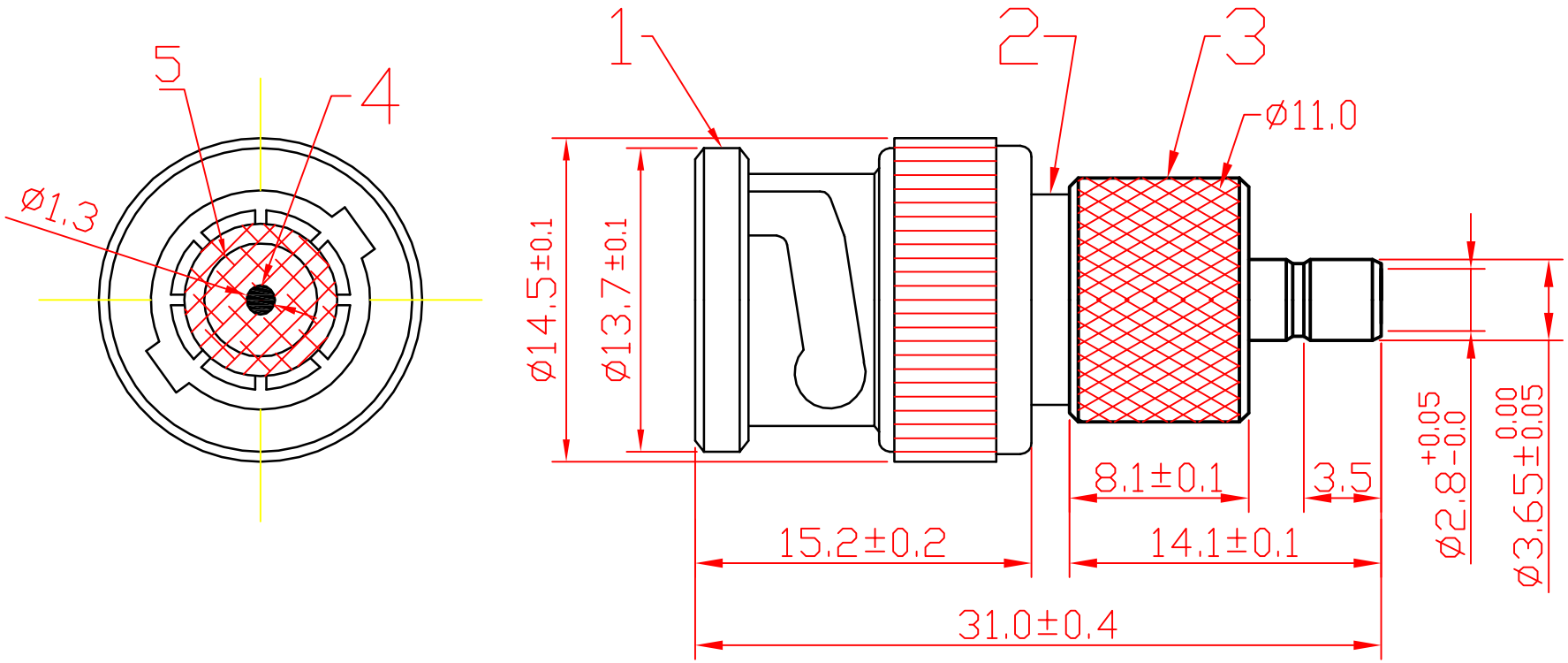

5	INSULATOR	POM	
4	PIN	BRASS	GOLD
3	SMB BODY	BRASS	GOLD
2	BNC BODY	BRASS	GOLD
1	BNC SHELL	Zn	GOLD
ITEM	DESIGNATION	MATERIAL	FINSH

TOLERANCE	
0 - 10	±0.05
10 - 99	±0.5
100 - 999	±10.0
1000 - 9999	±100.00
10000 - 99999	±1000.00

SIGNATURES		DATE
DRAFT: wang lan		29.05.18
CHECKED:		
APPROVAL:		
SCALE	UNIT	REV.
	mm	ø

大 廣 有 限 公 司
DA KOANG CO., LTD.

REV.	PART NO.SAMPLE NO.	BY
A	1490	
B		

SHEET OF

TITLE: BNC Male To SMB Female

CUSTOMER