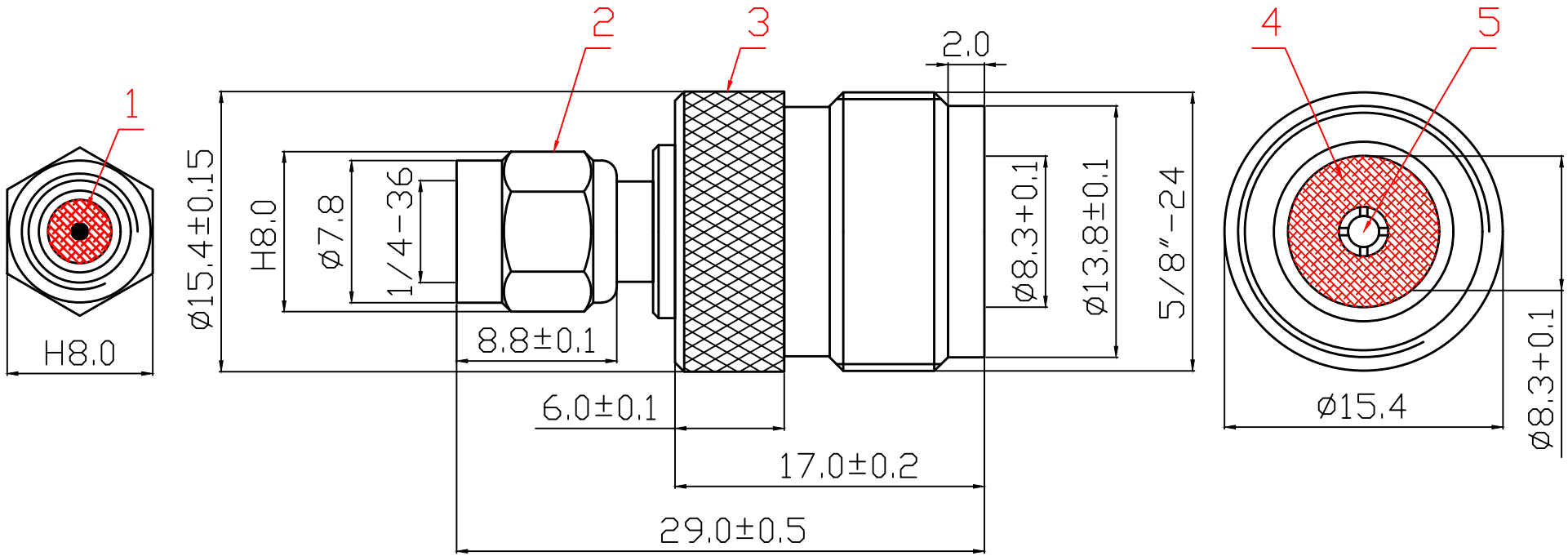

ITEM	DESIGNATION	MATERIAL
5	PIN	BRASS
4	INSULATOR	POM
3	BODY	BRASS
2	SMA SHELL	BRASS
1	INSULATOR	TEF

REV.	ECO	PART NO.	DATE	BY
A0		1227		
B				

TOLERANCE	
0 - 10	±0.05
10 - 99	±0.5
100 - 999	±10.0
1000 - 9999	±100.00
10000 - 99999	±1000.00

SIGNATURES	DATE
DRAFT: YangYongRui	05.09.24
CHECKED: HuGongXue	
APPROVAL:	

SHEET	SCALE	UNIT	REV.
OF		mm	ø

大 廣 有 限 公 司
DA KOANG CO., LTD.

TITLE: SMA Male To N Female

CUSTOMER