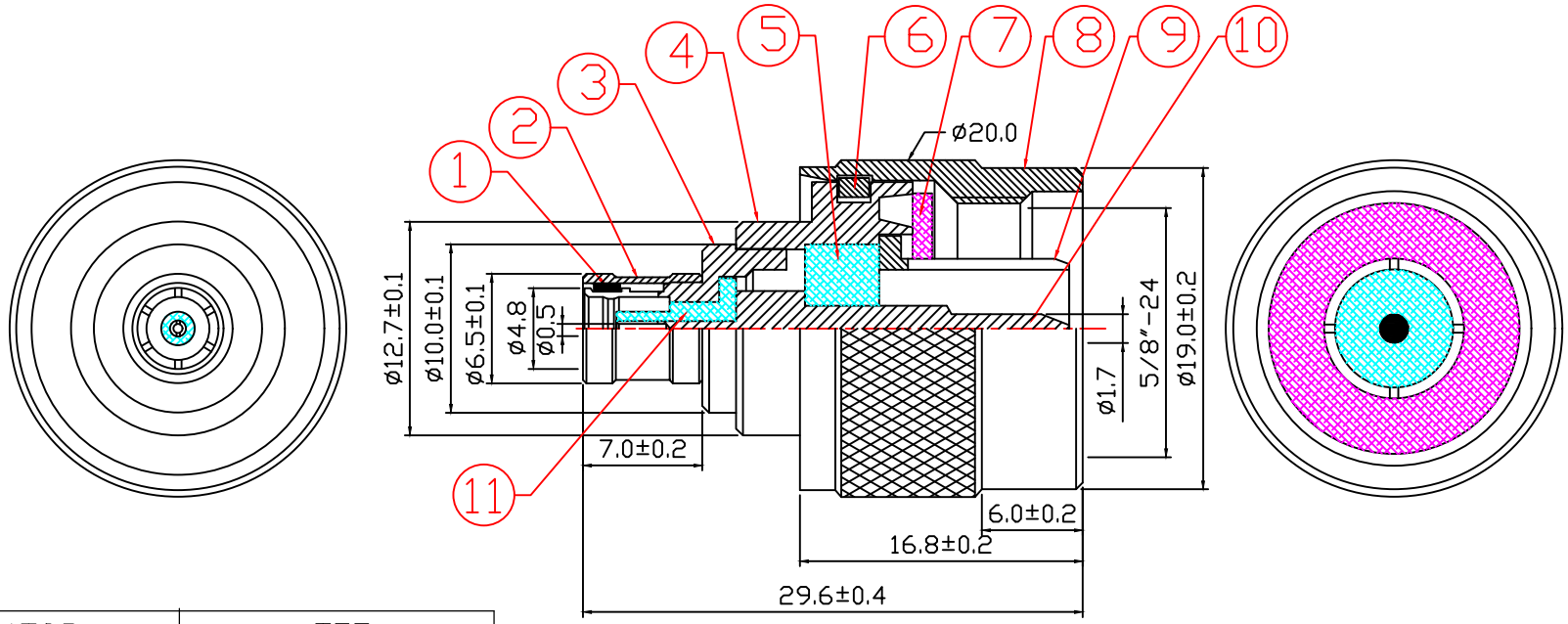

ITEM	DESIGNATION	MATERIAL
11	INSULATOR	TEF
10	PIN	BRASS
9	BUSHI9NG	BRASS
8	SHELL	BRASS
7	RUBBER RING	pvc
6	FERRULE	BRASS
5	INSULATOR	POM
4	BODY	BRASS
3	BODY	BRASS
2	SHELL	BRASS
1	FERRULE	BRASS

TOLERANCE	
0 - 10	±0.05
10 - 99	±0.5
100 - 999	±10.0
1000 - 9999	±100.00
10000 - 99999	±1000.00

SIGNATURES		DATE
DRAFT:	HuGongXue	06.02.11
CHECKED:		
APPROVAL:		

大 廣 有 限 公 司
DA KOANG CO., LTD.

REV.	ECO	PART NO.	DATE	BY
A		1491		
B				

SHEET	SCALE	UNIT	REV.
OF	1:1	mm	ø

TITLE: SMB MALE TO N MALE

CUSTOMER: