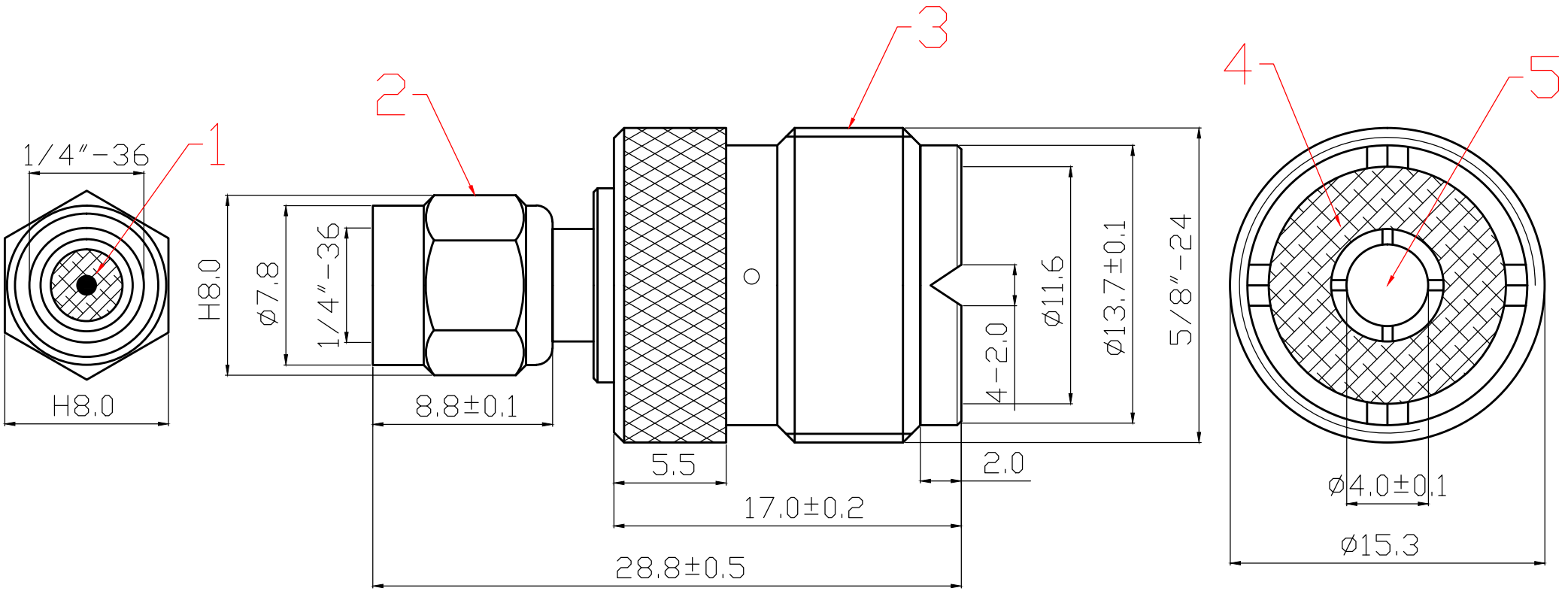

5	PIN	Cu
4	INSULATOR	POM
3	BODY	Cu
2	SMA SHELL	Cu
1	INSULATOR	TEF
ITEM	DESIGNATION	MATERIAL

TOLERANCE	
0 - 10	±0.05
10 - 99	±0.5
100 - 999	±10.0
1000 - 9999	±100.00
10000 - 99999	±1000.00

SIGNATURES	DATE
DRAFT: YangYongRui	05.09.24
CHECKED: HuGongXue	
APPROVAL:	

大 廣 有 限 公 司
DA KOANG CO., LTD.

REV.	ECO	PART NO.	DATE	BY
A		1462		
B				

SHEET	SCALE	UNIT	REV.
OF	1:1	mm	ø

TITLE	SMA Male To UHF Female
CUSTOMER	