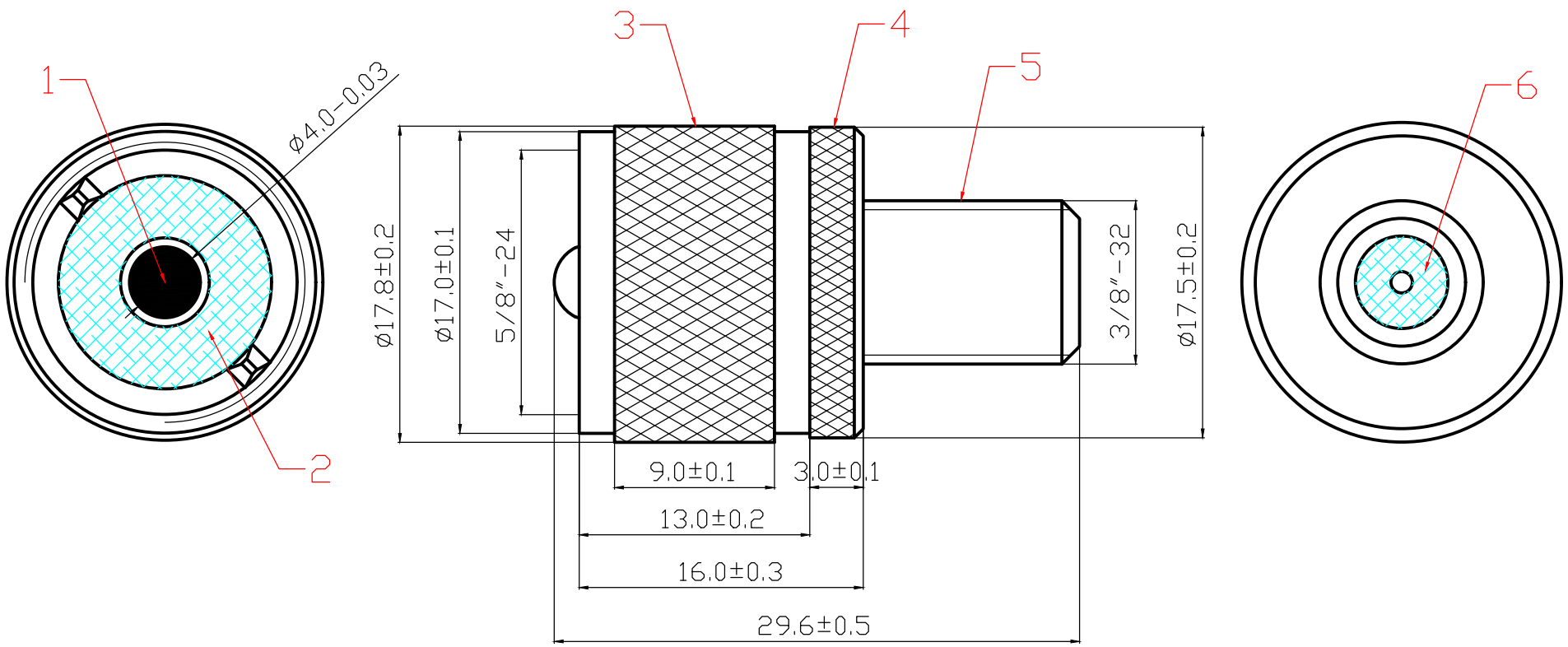

ITEM	DESIGNATION	MATERIAL
6	DIELECTRIC	PP
5	F FEMALE PART	BRASS
4	BODY	BRASS
3	SHELL	BRASS
2	DIELECTRIC	POM
1	PIN	BRASS

REV.	ECO	PART NO.	DATE	BY
A		1220		
B				

TOLERANCE	
0 - 10	±0.05
10 - 99	±0.5
100 - 999	±10.0
1000 - 9999	±100.00
10000 - 99999	±1000.00

SIGNATURES	DATE
DRAFT: YangYongRui	06.04.27
CHECKED: HuGongXue	
APPROVAL:	

SHEET	SCALE	UNIT	REV.
OF	1:1	mm	ø

大 廣 有 限 公 司
DA KOANG CO., LTD.

TITLE: UHF Male To F Female

CUSTOMER: