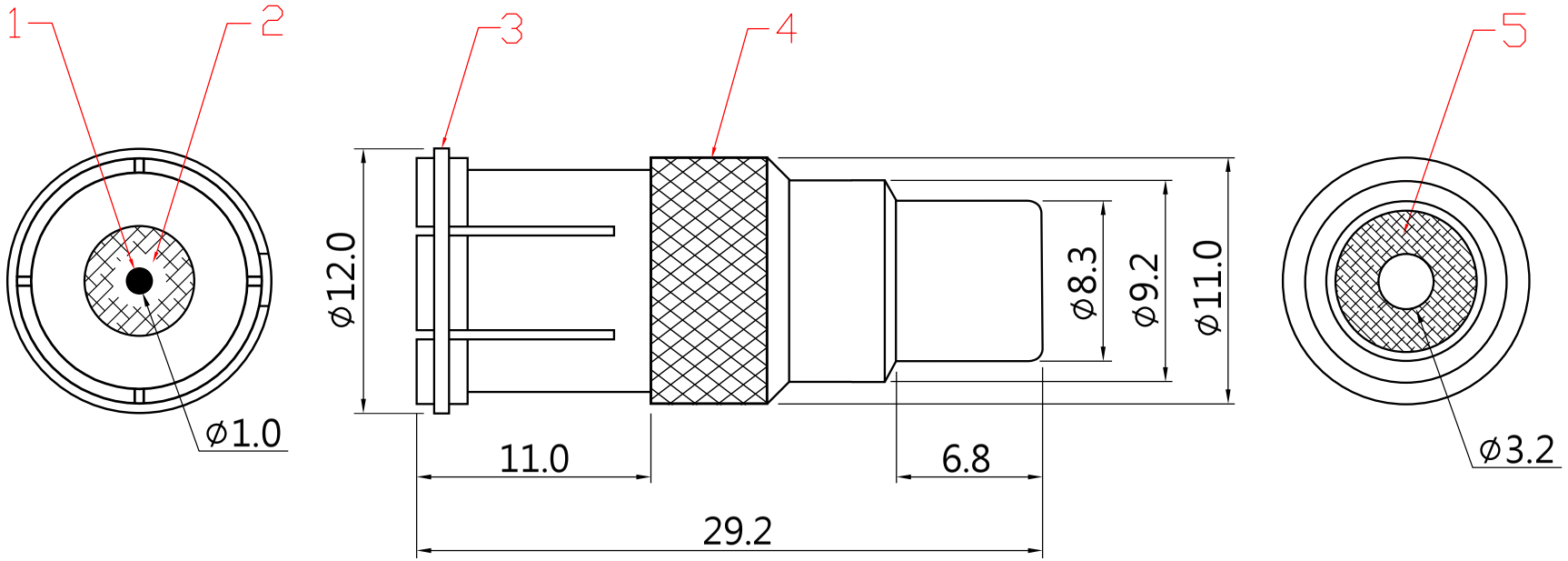

ITEM	DESIGNATION	MATERIAL
5	INSULATOR	POM
4	BODY	BRASS
3	FERRULE	Fe
2	INSULATOR	PS
1	PIN	BRASS

大 廣 有 限 公 司 DA KOANG CO., LTD.

DATE	DWN	CHKD	APVD	MANAGFR
12.26.2011				

PART NAME: F QUICK MALE TO RCA FEMALE

PART NUMBER: 1418

VERSION:4.0

TOLERANCE :±0.3mm UNLESS OTHERWISE SPECIFIED

UNIT:mm

SCALE: