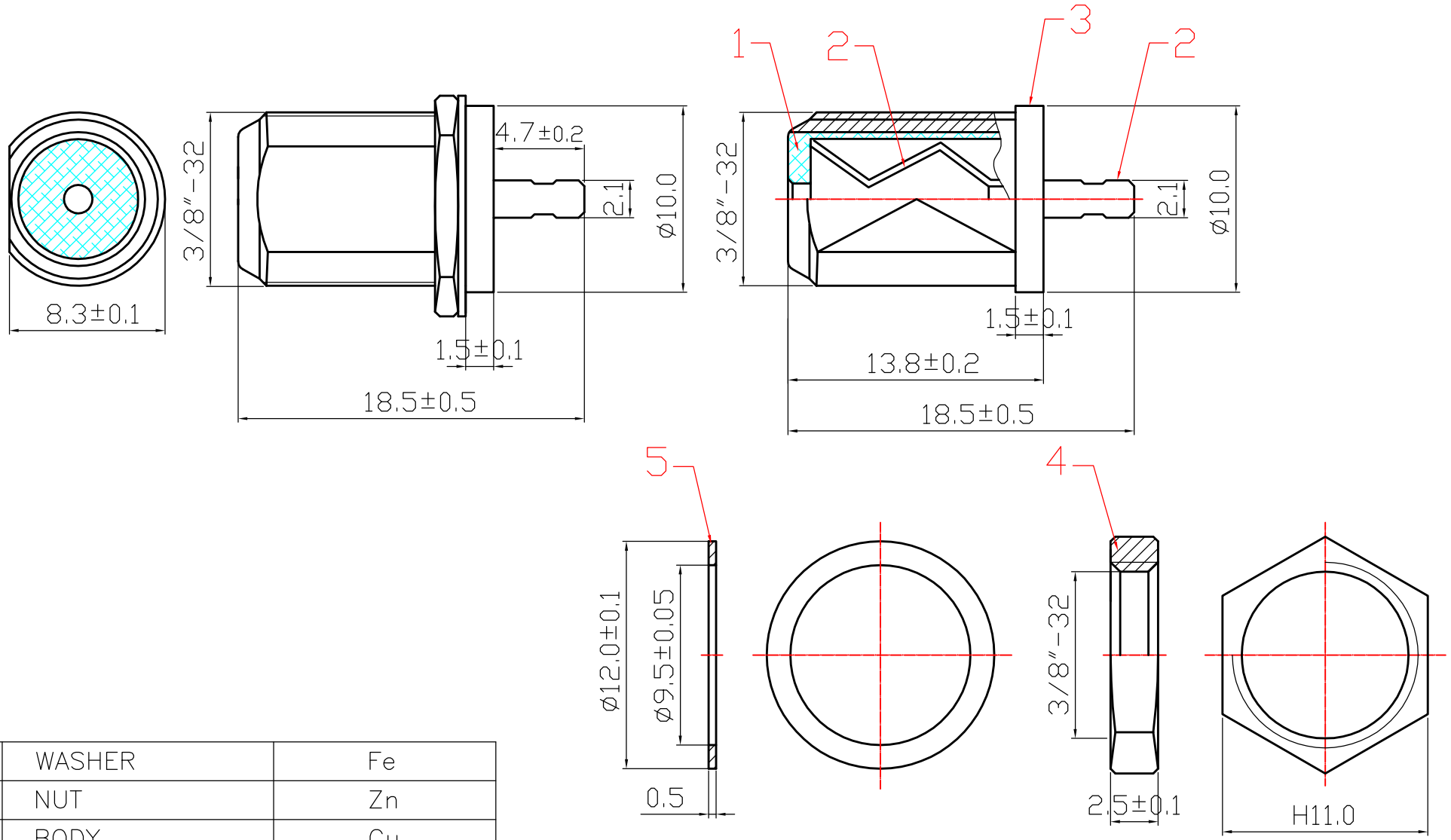

ITEM	DESIGNATION	MATERIAL
5	WASHER	Fe
4	NUT	Zn
3	BODY	Cu
2	PIN	Cu
1	DIELECTRIC	PP

REV	PART NO.& SAMPLE NO.	DATE	BY
A	2120		
B			

TOLERANCE	
0 - 10	±0.05
10 - 99	±0.5
100 - 999	±10.0
1000 - 9999	±100.00
10000 - 99999	±1000.00

SIGNATURES	DATE
DRAFT: YangYongRui	05.10.13
CHECKEO: HuGongXue	
APPROVAL:	

SHEET	SCALE	UNIT	REV
OF	1:1	mm	ø

大 廣 有 限 公 司
DA KOANG CO., LTD.

TITLE: F Female B Type Chassis Mount

CUSTOMER