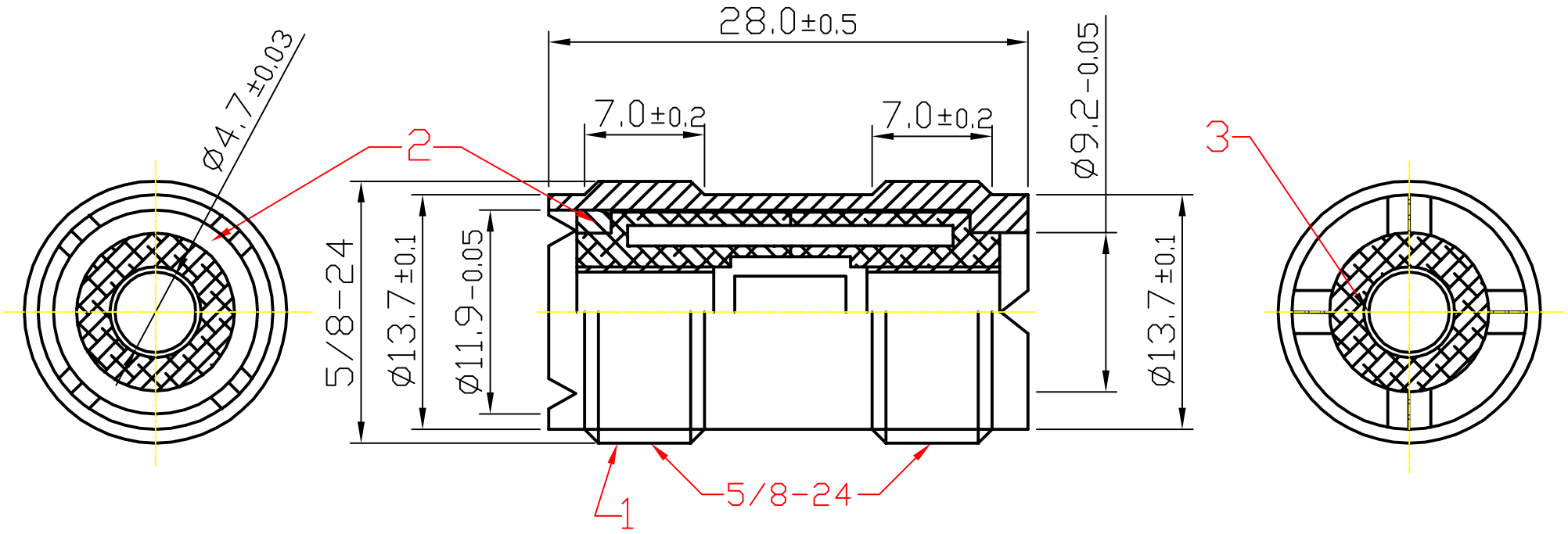


| ITEM | DESIGNATION | MATERIAL |
|---|---|---|
| 3 | PIN | BRASS |
| 2 | INSULATOR | POM |
| 1 | BODY | Zn |

| REV. | ECO | PART NO. | DATE | BY |
|---|---|---|---|---|
| A0 | | 2136 | | |
| B | | | | |

| TOLERANCE | |
|---|---|
| 0 - 10 | ±0.05 |
| 10 - 99 | ±0.5 |
| 100 - 999 | ±10.0 |
| 1000 - 9999 | ±100.00 |
| 10000 - 99999 | ±1000.00 |

| SIGNATURES | | DATE |
|---|---|---|
| DRAFT: LI XIAO RONG | | 2019.5.13 |
| CHECKED: | | |
| APPROVAL: | | |
| SCALE | UNIT | REV. |
| | mm | ø |

SHEET OF

大 廣 有 限 公 司
DA KOANG CO., LTD.

TITLE: UHF Double Female

CUSTOMER