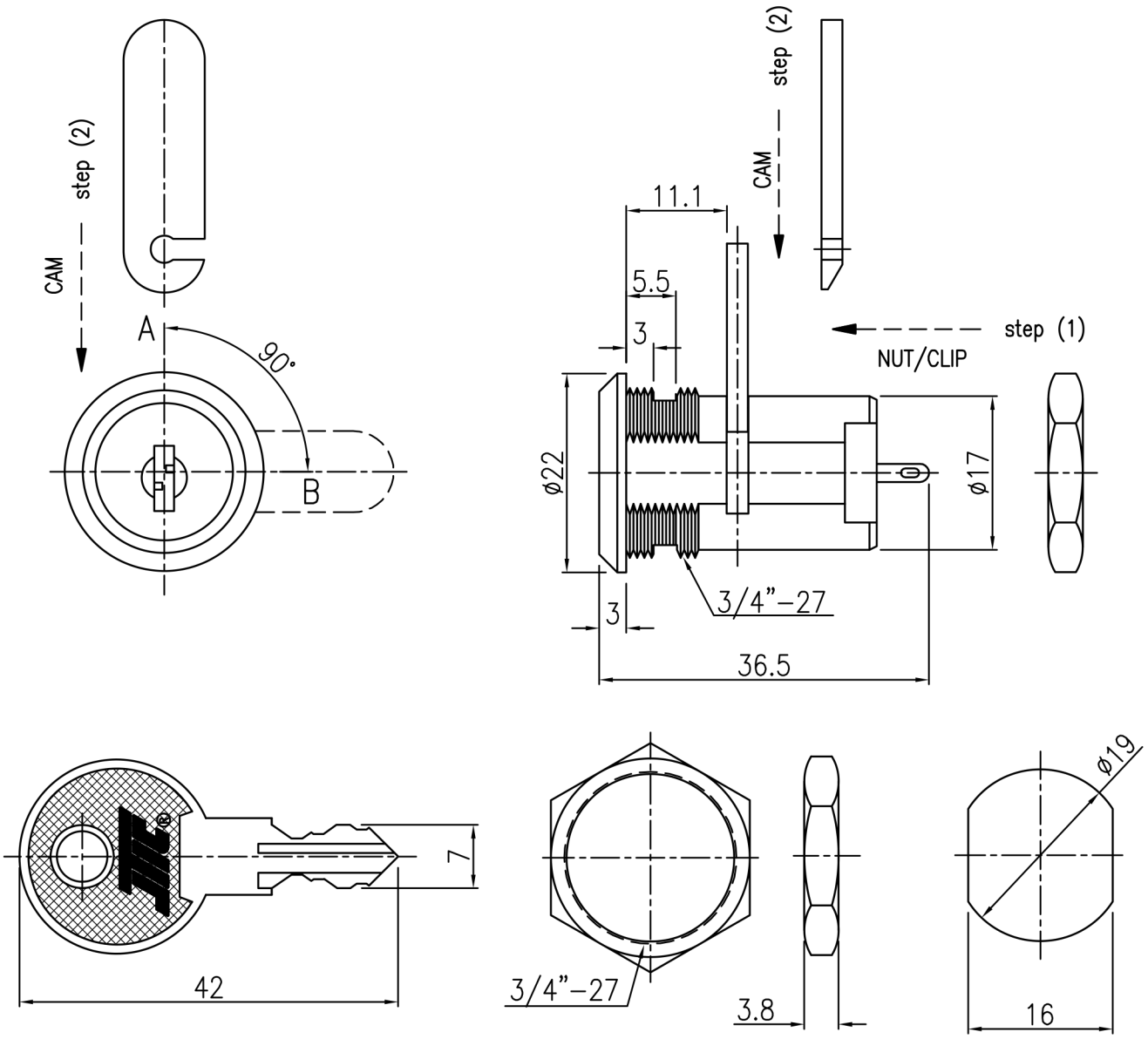

DESCRIPTIONS:

1. Zinc alloy die cast housing and cylinder, nickle plated.
2. Reversible double cut key – brass made nickel plated.
3. 4–Disk tumblers mechanism, brass terminals.
4. Dual–Functioned Key Lock Switch.
5. S2096 2 Positions (OFF–ON) 2 Terminals.
6. Hex nut or speed clip mounted.
7. Met with ROHS.

Recommended hole size

DATE	02.20.09	SCALE	2:1	UNIT	mm	WT. :	g	REV.: A	DESCRIPTION	SWITCH LOCK
TOLERANCES	APPROVED BY	林志榕	CHECKED BY	林志榕	DRAWN BY	陳虹穎			PART NO.	5138
	大 廣 有 限 公 司 DA KOANG CO., LTD.								MATERIAL	
									NOTE	

REV. NO.	COORDINATES	WAS	NEW	DATE	BY