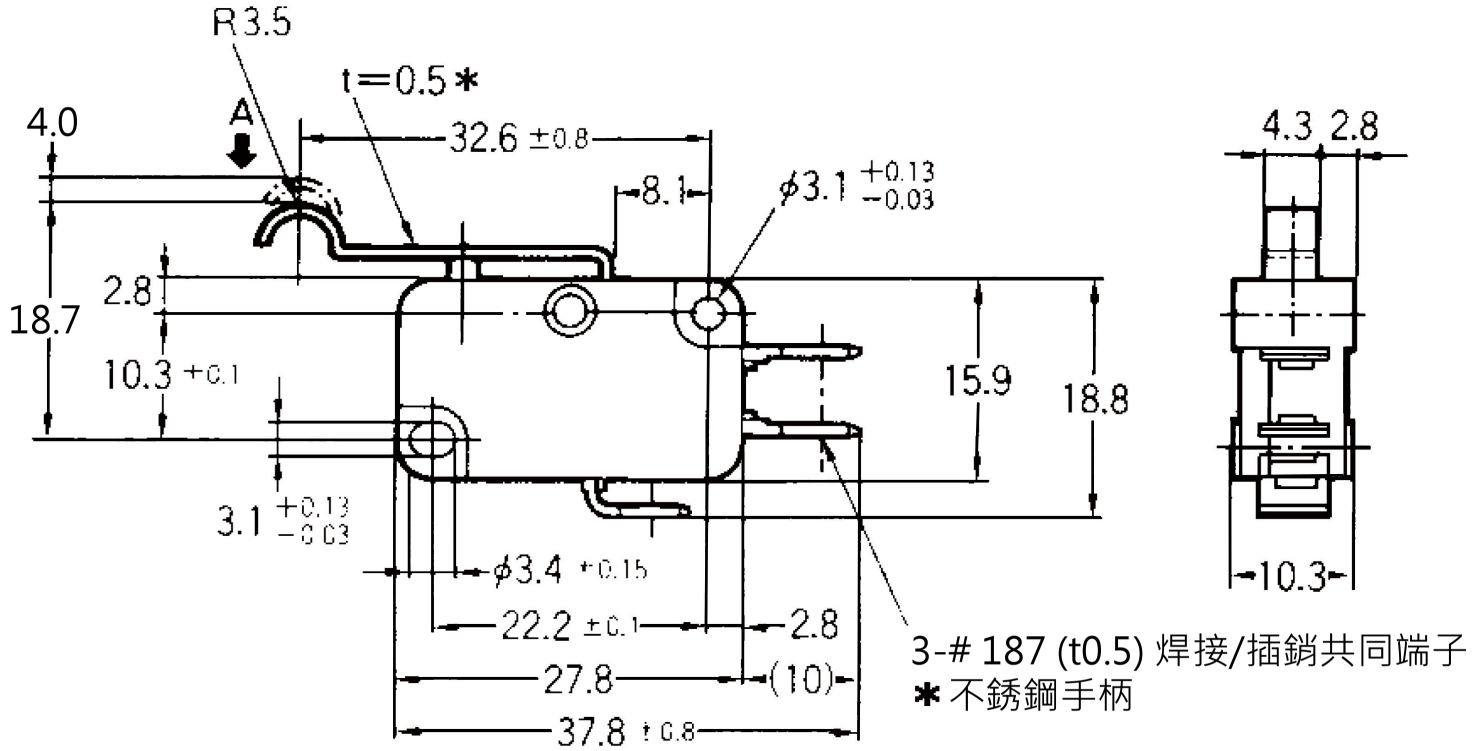

大 廣 有 限 公 司 DA KOANG CO., LTD.	DATE	DWN	CHKD	APVD	MANAGFR
	12.26.2011				
PART NAME: OMRON MICRO SWITCH	PART NUMBER: 5091A			VERSION:4.0	
TOLERANCE :±0.3mm UNLESS OTHERWISE SPECIFIED	UNIT:mm			SCALE:	

Rated voltage : 250VAC 15A
Operating Force OF Max.: 1.23N
Releasing Force RF Min.: 0.14N
Insulation resistance:
100 MΩ min.
(at 500 VDC with insulation tester)
Minimum applicable load:
5VDC 160mA