CHARACTERISTICS	
Contact resistance	15mΩ max. (initial)
Insulation resistance	100MΩ min. (at 500 VDC)
Dielectric strength	1,000 VAC,50/60Hz for 1 minute between
Mechanically service life	1,000,000 operations min.
Electrically service life	100,000 operations min.

Rating	15A 125VAC or 250VAC
Terminal	
Item No.	5104B
OF max.	15g
RF min.	2g
PT max.	10mm
OT min.	6mm
MD max.	3mm
FP max.	30mm
OP	20± 1mm

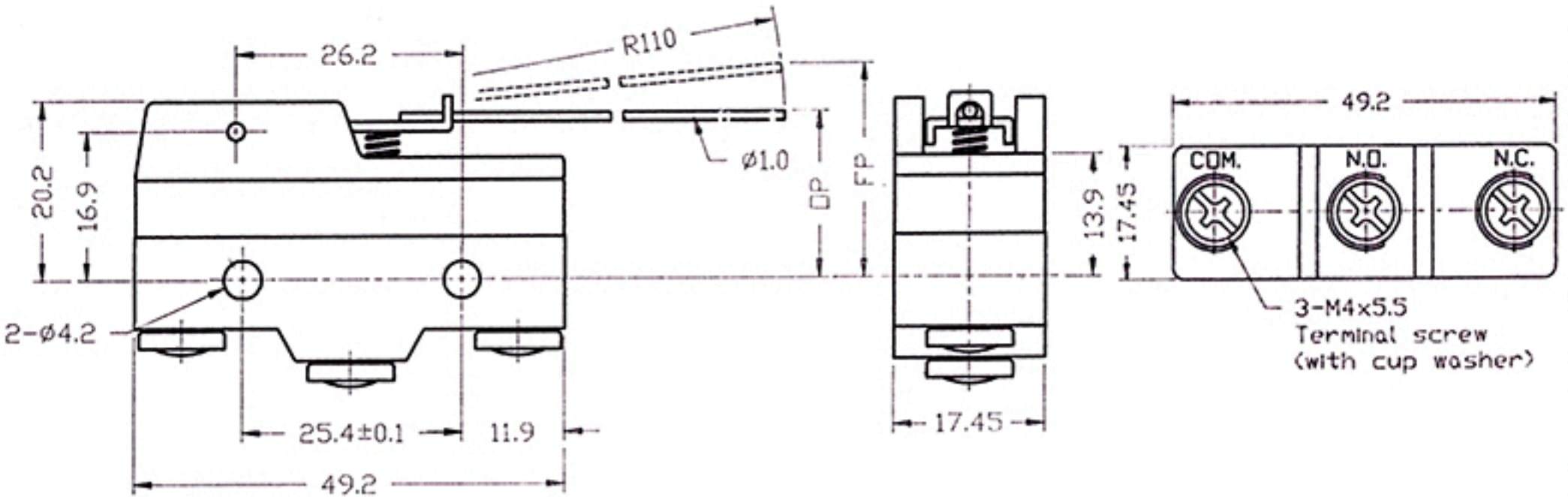

大 廣 有 限 公 司 DA KOANG CO., LTD.

FILE NO.	TYPE NO.	ITEM NO.	UNIT	SCALE	TOLERANCE	DRAWN	CHECKED	DATE
01113050	Z-TYPE	5104B	m/m	1.5 : 1		J. lee		3/15-1989