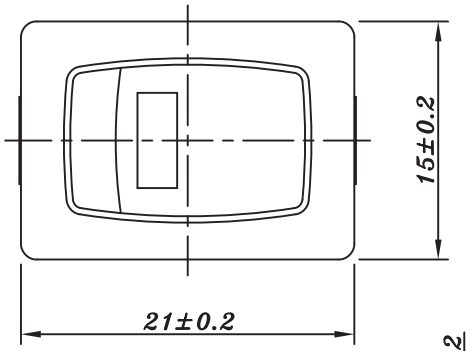

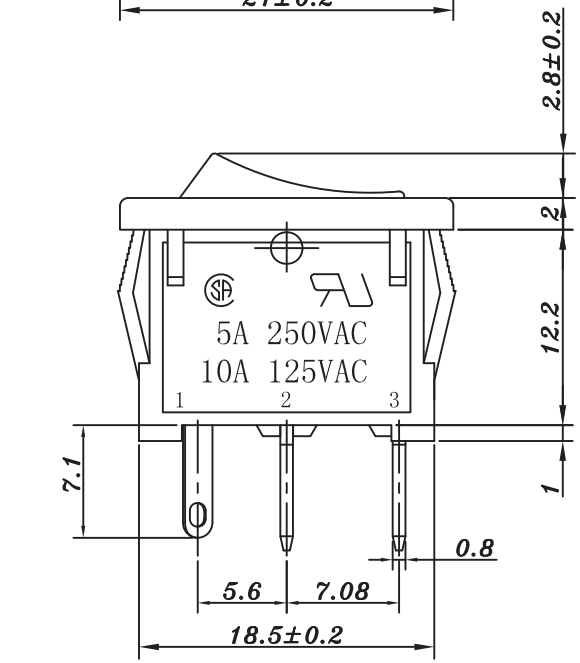

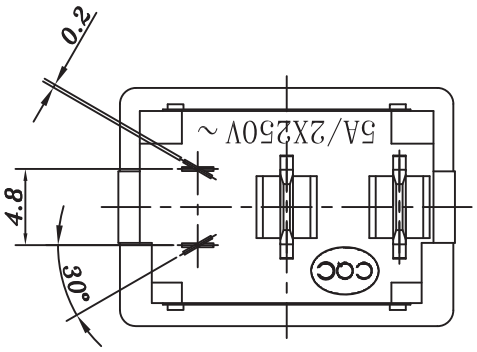

MOUNTING HOLE

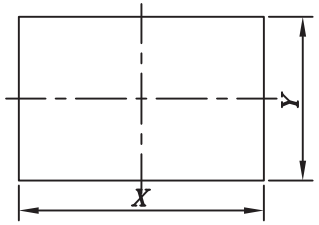

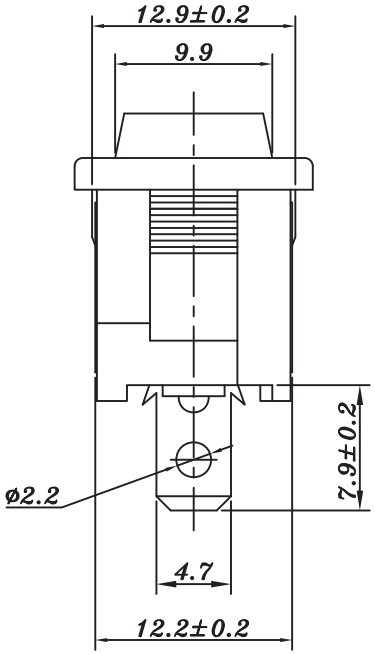

SPECIFICATION

CONTACT RATING :5A 250VAC 10A 125VAC ( )
:10A 250VAC/125VAC( )
:6(1)A 250V~μT85 (D N S FI)
5A/2X250VAC (CQC)

CONTACT RESISTANCE :50Milliohms Max.
INSULATION RESISTANCE :500 Megohms Min. 500VDC
WITHSTAND VOLTAGE :2,000 VAC-1 Minute
LIFE EXPECTANCY :10,000 Cycles
OPERATING FORCE :400±200 gf
RoHS COMPLIANCE

UL FILE NO : E105856
CSA UL FILE NO : LR112904
VDE FILE NO : 40004251
CQC FILE NO : CQC03002004731
DEMKO FILE NO : 313239-01
NEMKO FILE NO : P05203712
SEMKO FILE NO : 502273
FI FILE NO : 21533

Panel Thickness	Dim. X	Dim. Y
0.75~1.25	19.2/19.1	13.0/12.9
1.25~2.0	19.4/19.3	13.0/12.9
2.0~3.0	19.8/19.7	13.0/12.9

MODEL NO	SCHEMATIC
5113	+ − 1 2 3

MAIN SIZE(*)		IMPORTANT SIZE	
A1	21±0.2	A	18.5±0.2
B1	15±0.2	B	7.08
C1	12.2	C	5.6
D1	2.8±0.2	D	7.1
		E	7.9±0.2
		F	12.2±0.2
		G	12.9±0.2
		H	4.7
		I	4.8

大 廣 有 限 公 司 DA KOANG CO., LTD.					DES	BR SERIES
TOL	>0.3~6 ±0.1 >6~30 ±0.15 >30 ±0.3 ANG ±1°	DRW	潘良兵	06/04/22	TITLE	ROCKER SWITCH
		DESIGN	潘良兵	06/04/22	DWG NO.	
		CHECKED			MODEL	5113
SCALE 2:1	UNIT mm	APPROVED			VERSION	A0
PROJ		TOTAL 1	PAGE 1		DATE	