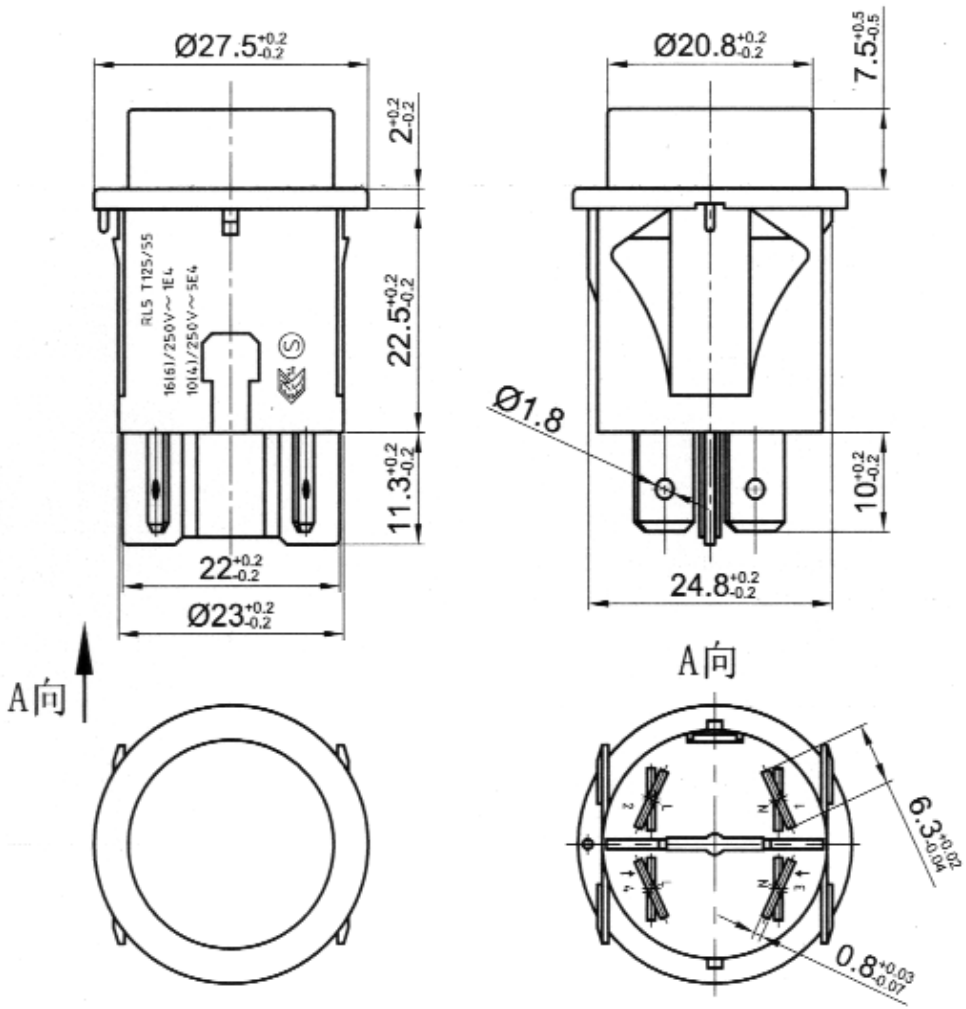

SPECIFICATION

1. RATING:16(6)/250VAC 1E4 T125/55
   16(4)/250VAC 5E4
   16 150VAC T105 UL C-UL
   1/2HP 250VAC 3/4HP 250VAC
   ENEC SEMKO
2. NEON LAMP:AC110V
3. CIRCUIT:ON-OFF W/Lamp DPST 4P
4. CONTACT RESISTANCE:30m OHMS Max
5. INSULATION RESISTANCE:DC500V 100M OHMS Min
6. WITHSTAND VOLTAGE:AC 1500V 1 Minute
7. ELECTRICAL LIFE:10000 Cycles at Full Load
8. OPERATION FORCE:1000~1500gf
9. OPERATION TEMPERATURE RANGE:-25~+125° C

PANEL HOLE SIZE

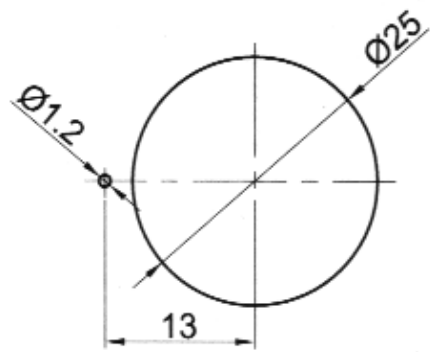

MATERIALS

1. HOUSING:Nylon #66 UL 94V-2
2. ROCKER:PC UL 94HB
3. TERMINAL:Copper Alloy Sn or Ag plated
4. CONTACTOR:$AgSnO_2In_2O_3$(10)/Cu

大 廣 有 限 公 司 DA KOANG CO., LTD.						51723	
设计	签名	年月日	标准化	签名	年月日	TITLE PUSH SWITCH	SERIES RL5
绘图	夏雄庚	11.01.11					FUNCTION ON-OFF W/Lamp
审核	张仁阳					VIEWS TYPE	DRAWING NUMBER
工艺			批准				