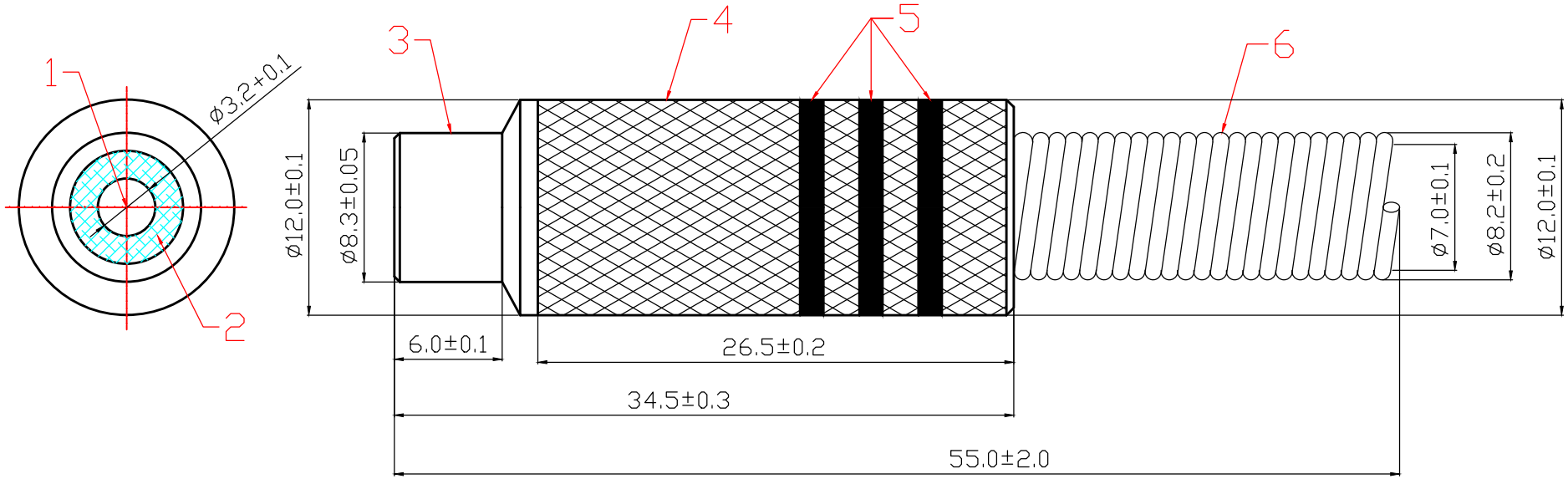

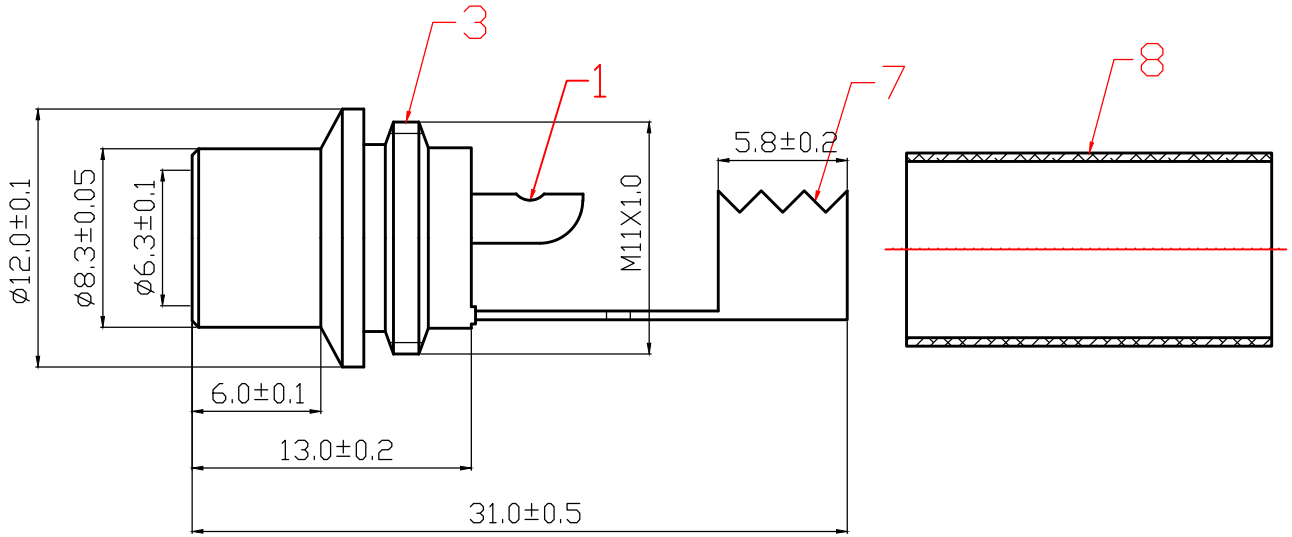

ITEM	DESIGNATION	MATERIAL
8	PLASTIC HOSE	PVC
7	CRIMPING PATCH	BRASS
6	SPRING	Fe
5	PLASTIC RING	PVC
4	SHELL	BRASS
3	BODY	BRASS
2	DIELECTRIC	Bakelite/POM
1	PIN	BRASS

REV	PART NO.& SAMPLE NO.	DATE	BY
A	1360		
B			

TOLERANCE	
0 – 10	±0.05
10 – 99	±0.5
100 – 999	±10.0
1000 – 9999	±100.00
10000 – 99999	±1000.00

SIGNATURES	DATE
DRAFT: YangYongRui	06.10.27
CHECKEO:HuGongXue	
APPROVAL:	

SHEET	SCALE	UNIT	REV
OF	1:1	mm	ø

大 廣 有 限 公 司
DA KOANG CO., LTD.

TITLE: RCA Jack W/Spring For 6mm Cable Gold Plated (Red/Black)

CUSTOMER