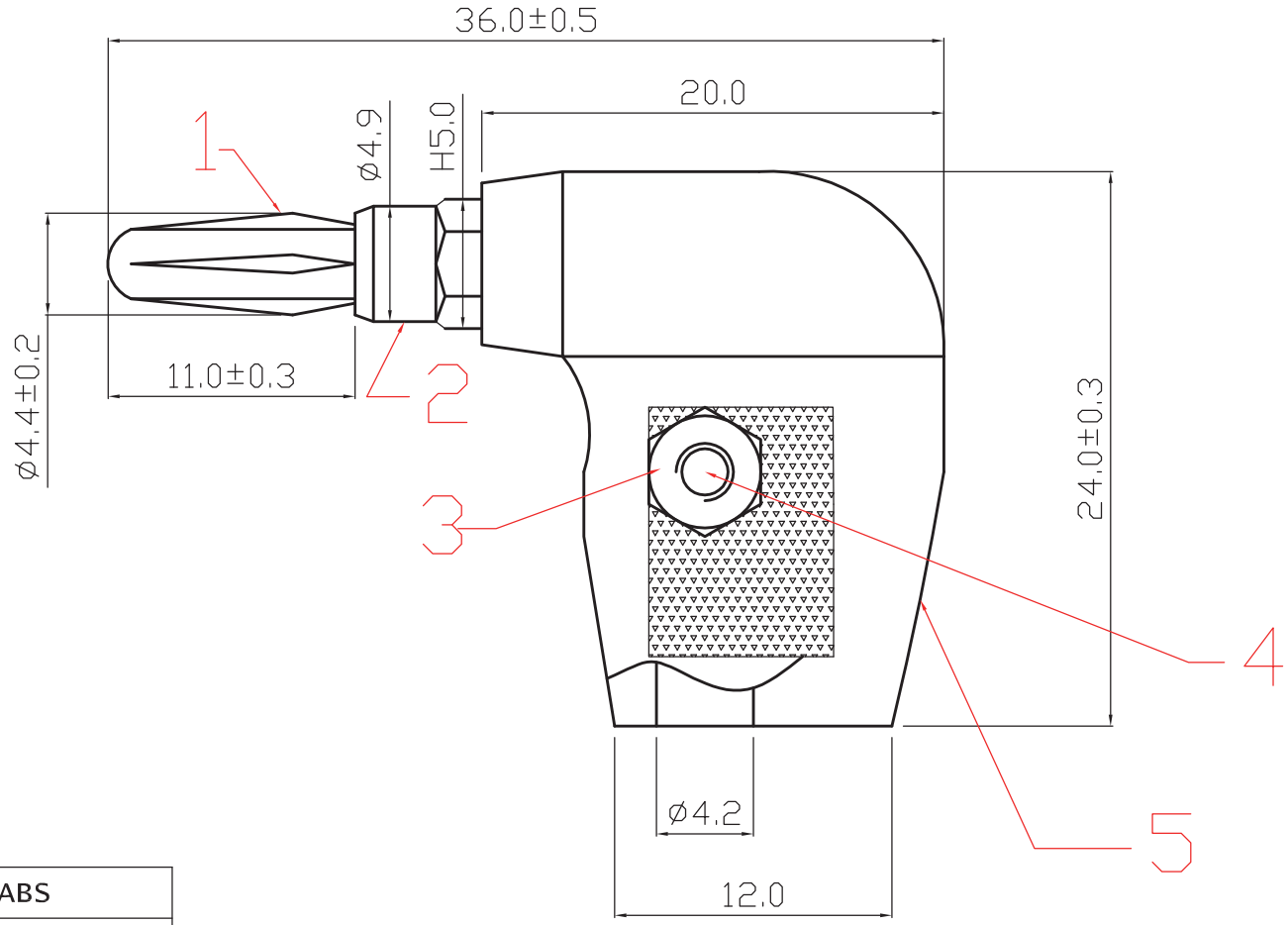

5	SHELL	ABS
4	SCREW	Fe
3	NUT	Fe
2	BODY	PHOSPHOR BRASS
1	BANANA PLUG	PHOSPHOR BRASS
ITEM	DESIGNATION	MATERIAL

REV	PART NO.& SAMPLE NO.	DATE	BY
A	1009		
B			

TOLERANCE	
0 – 10	±0.05
10 – 99	±0.5
100 – 999	±10.0
1000 – 9999	±100.00
10000 – 99999	±1000.00

SIGNATURES		DATE
DRAFT:ZHOU XIN GUO		02-02-2012
CHECKEO:		
APPROVAL:		
SCALE	UNIT	REV
1:1	mm	ø

SHEET OF

大 廣 有 限 公 司
DA KOANG CO., LTD.

TITLE: Banana Plug, Rt. Angle

CUSTOMER