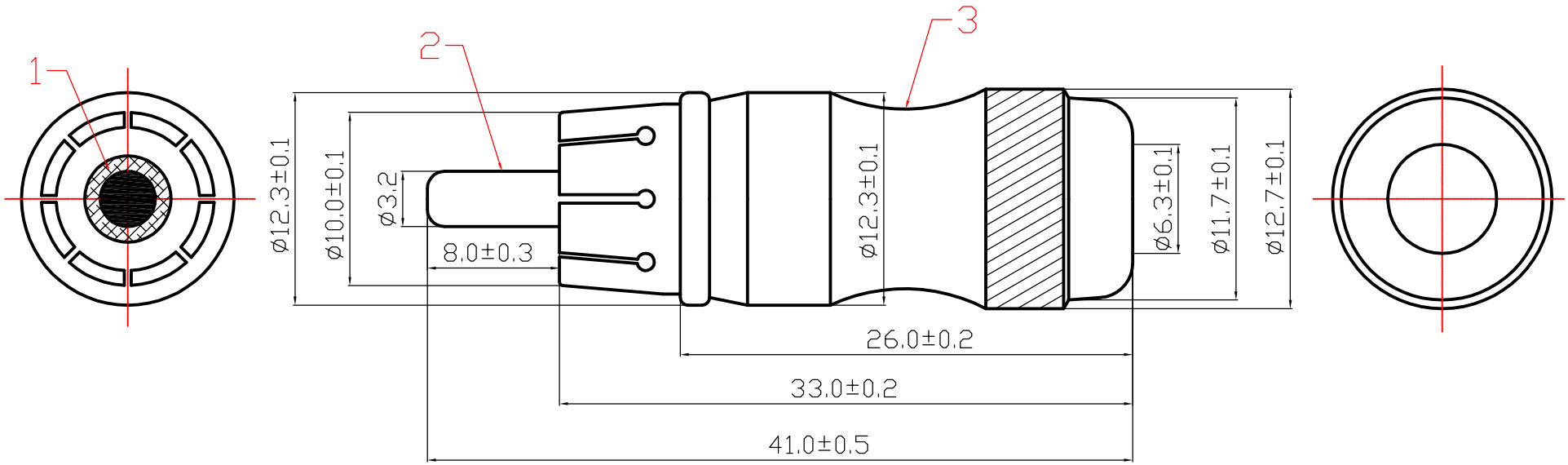

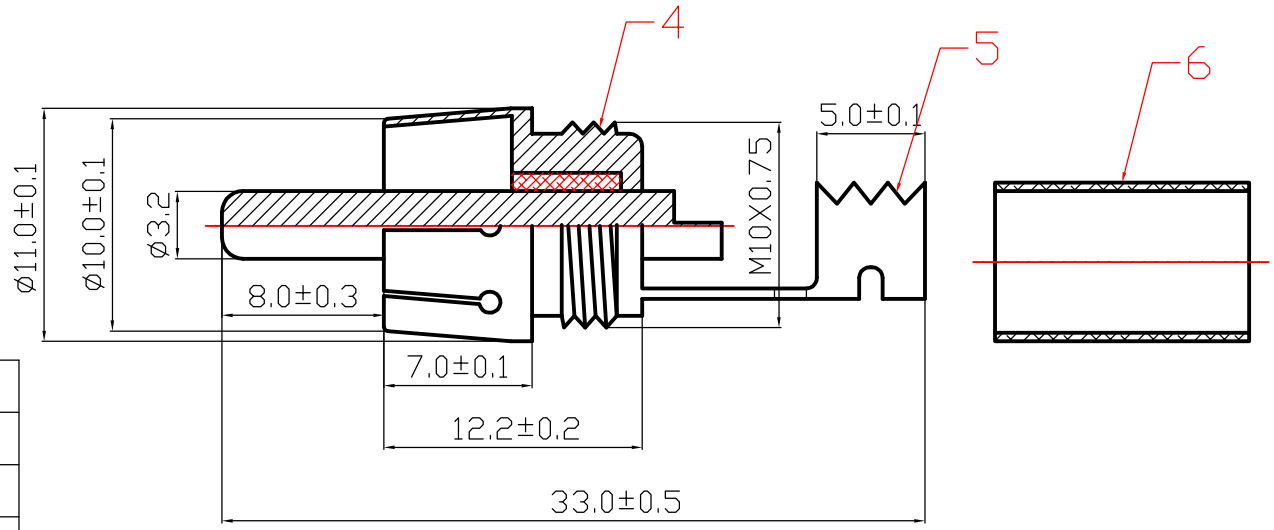

ITEM	DESIGNATION	MATERIAL
6	PLASTIC TUBE	PVC
5	CRIMPING PATCH	Cu
4	BODY	Cu
3	SHELL	Cu
2	PIN	Cu
1	DIELECTRIC	POM

REV	PART NO.& SAMPLE NO.	DATE	BY
A	1042		
B			

TOLERANCE	
0 – 10	±0.05
10 – 99	±0.5
100 – 999	±10.0
1000 – 9999	±100.00
10000 – 99999	±1000.00

SIGNATURES	DATE
DRAFT: CHENG HUAN	09.03.20
CHECKEO:	
APPROVAL:	

SHEET	SCALE	UNIT	REV
OF	1:1	mm	ø

大 廣 有 限 公 司
DA KOANG CO., LTD.

TITLE	RCA Phono Plug (Red,Green,Blue)
CUSTOMER	