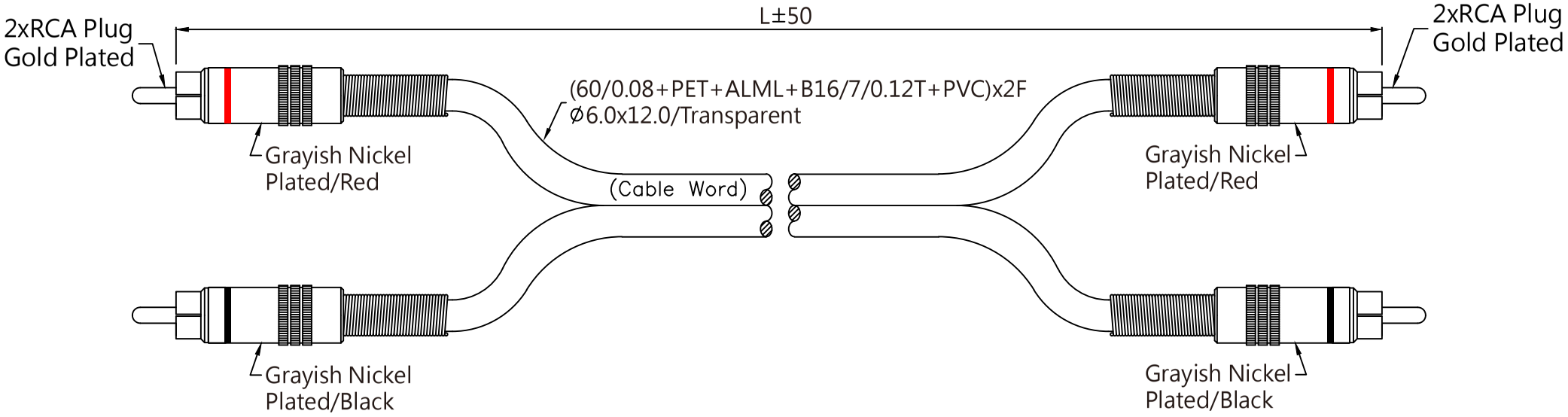

Soldered Drawing:

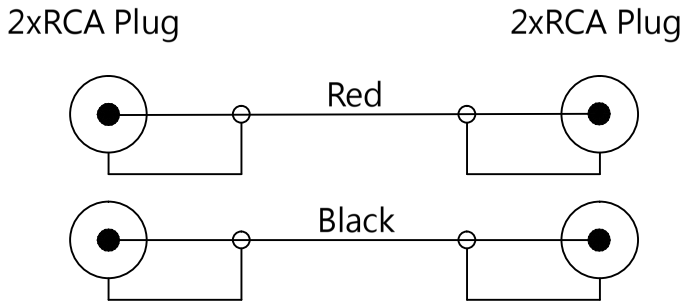

TOLERANCE	SIGNATURES		DATE
0 – 10 ±0.05 10 – 99 ±0.5 100 – 999 ±10.0 1000 – 9999 ±100.00 10000 – 99999 ±1000.00	DRAFT: ZHOU XIN GUO		11-03-2015
	CHECKEO: XU FU YOU		
	APPROVAL:		
SHEET	SCALE	UNIT	REV
OF	1:1	mm	Ø

大 廣 有 限 公 司
DA KOANG CO., LTD.

REV	PART NO. SAMPLE NO.	BY
A	1288	
B		

TITLE: 2xRCA Plug To 2xRCA Plug Gold Plated

CUSTOMER: