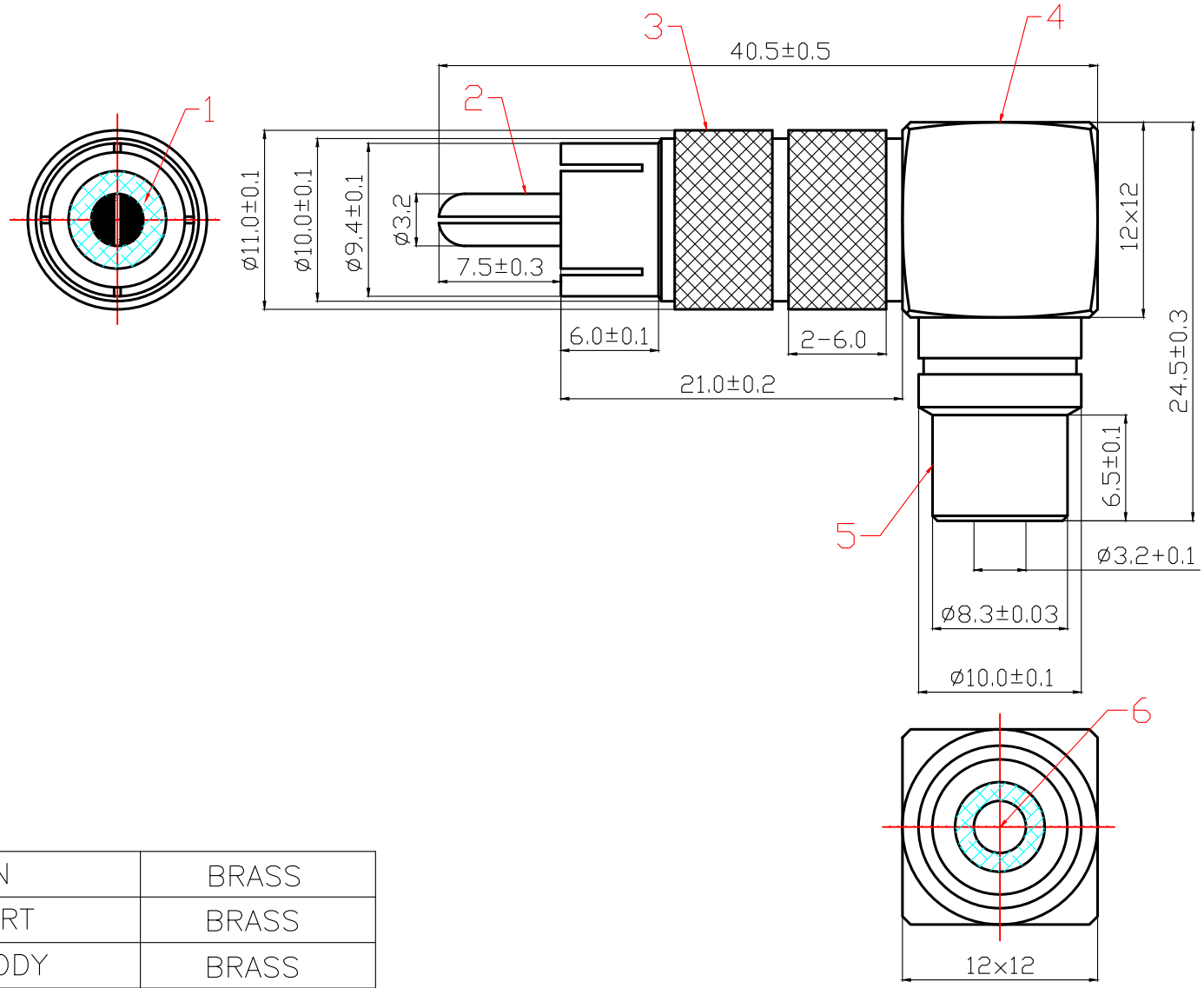

ITEM	DESIGNATION	MATERIAL
6	FEMALE PIN	BRASS
5	FEMALE PART	BRASS
4	SQUARE BODY	BRASS
3	MALE PART	BRASS
2	MALE PIN	BRASS
1	DIELECTRIC	POM

REV	PART NO.& SAMPLE NO.	DATE	BY
A	1138B		
B			

TOLERANCE	
0 - 10	±0.05
10 - 99	±0.5
100 - 999	±10.0
1000 - 9999	±100.00
10000 - 99999	±1000.00

SIGNATURES	DATE
DRAFT: YangYongRui	06.06.10
CHECKED HuGongXue	
APPROVAL:	

SHEET	SCALE	UNIT	REV
OF	1:1	mm	ø

大 廣 有 限 公 司
DA KOANG CO., LTD.

TITLE	Right Angle RCA Plug To Jack Gold Plated
CUSTOMER	