REVISIONS		
ISS	SYMBOL	DESCRIPTION\DATE
A2		更換 FERRULE \10/28/09'

FOR CUSTOMER

REMARK: RoHS COMPLIANT
(符合 RoHS)

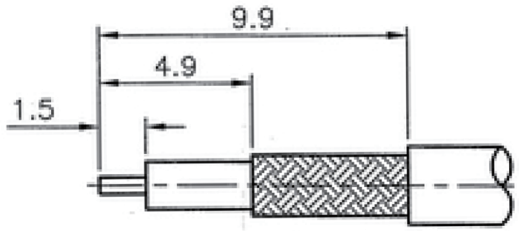

RECOMMENDED
CABLE STRIPPING DIM'S
(建議剝線尺寸)

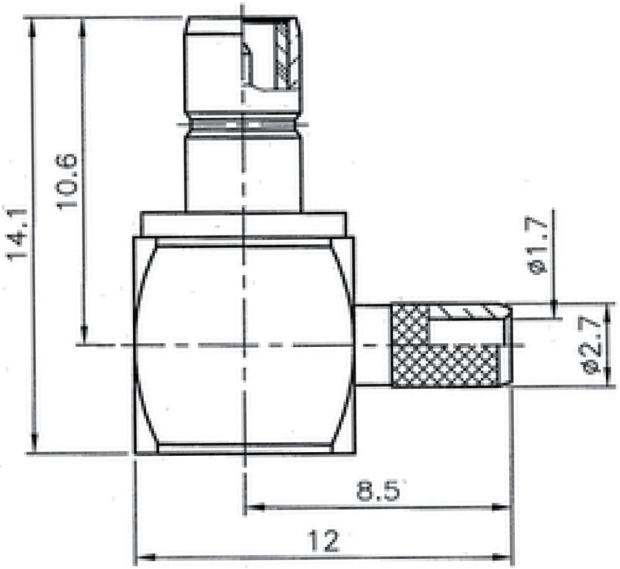

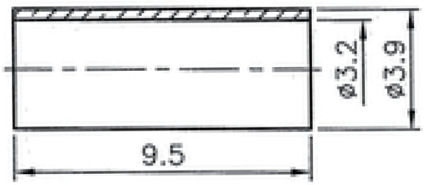

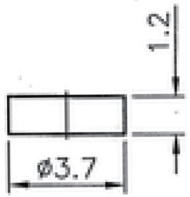

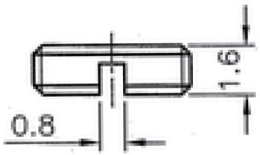

NOTES: FINISH (PLATING THICKNESS IN MICRO-INCHES)
1. BRASS PER QQ-B-626
2. GOLD PL 3 MIN OVER NICKEL PL 70 MIN THICK OVER COPPER STRIKE
3. GOLD PL 30 MIN OVER NICKEL PL 70 MIN THICK OVER COPPER STRIKE
4. TEFLON MIL-P-19468
5. COPPER JIS H 3300, C 1220

1. CRIMPED FERRULE
HEX CRIMP SIZE .128" (3.25mm)
(套管壓著工具)
2. CONTACT PIN TO SOLDER
(中心針銲接)

NO.	DESCRIPTION	MATERIAL	FINISH	Q'TY	DRAWING NO.
	COVER	NOTE 1	NOTE 2		
	SPACER	NOTE 4	WHITE		
	FERRULE	NOTE 5	NOTE 2		
	CONTACT PIN	NOTE 1	NOTE 3		
	INSULATOR	NOTE 4	WHITE		
	CUBE BODY	NOTE 1	NOTE 2		
	BODY	NOTE 1	NOTE 2		

DIMENSIONS ARE IN MILLIMETERS

UNLESS OTHERWISE SPECIFIED TOLERANCES
(一般公差)
0.5~6 = ±0.2
>6~30 = ±0.4
>30~120 = ±0.6
>120~315 = ±1
>315~1000 = ±1.6
ANGLES(角度) = ±5'

SCALE 4/1 | ISSUE A2

PART NO.

APPROVED Mark DATE 10/28/09'

CHECKED Mark DATE 10/28/09'

DRAWN Alice DATE 10/28/09'

大 廣 有 限 公 司 DA KOANG CO., LTD.

TITLE
SMB R/A CRIMP JACK
(FOR RG-174/U,188A/U,316/U)

DRAWING NO. 1424A

FILE NO. Z:\NND\9161\NR\509\000\9161NR509BD000B-A2