	REVISION RECORD MODIFICATIONS	DATE	REV.
		2011/01/19	A/0
⚠	NEW		

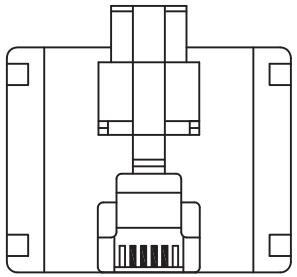

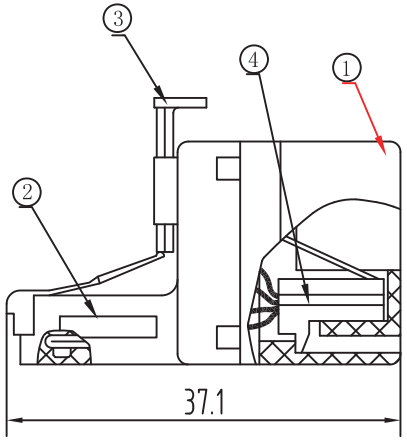

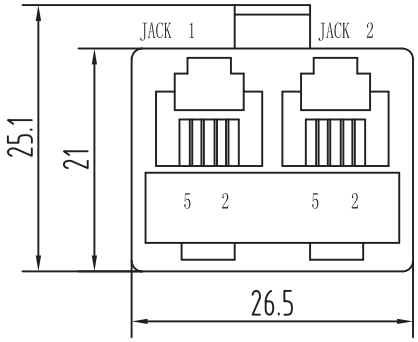

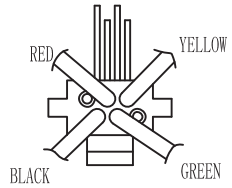

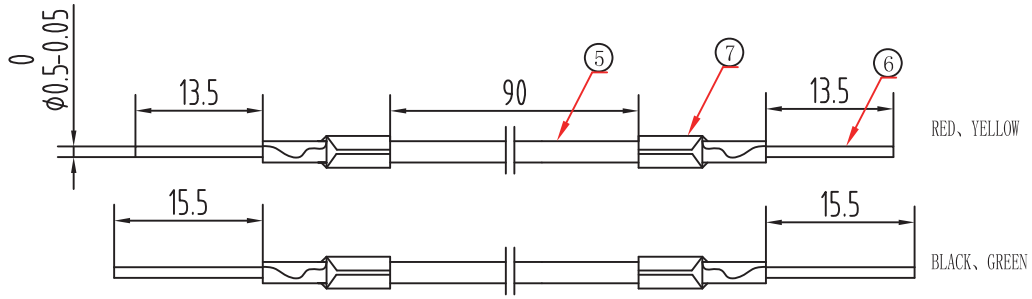

WIRING DIAGRAM

JACK 1 (6P4C)		PLUG 1 (6P4C)		JACK 2 (6P4C)
2	BLACK	2	BLACK	2
3	RED	3	RED	3
4	GREEN	4	GREEN	4
5	YELLOW	5	YELLOW	5

NOTES:

1. Electrical testing:100%
2. Visual inspection:100%
3. ROHS Compliant

MATERIAL LIST:

NO.	MAT. NAME	DESCRIPTION	QT'Y	REMARK
⑦	ADAPTER SLEEVE	CU	8	
⑥	GOLD SILK	CU PLATE GLOD 3U″	8	
⑤	LINE	OD:0.98 COLOR:BLACK、RED、YELLOW、GREEN	4	
④	145 LOCK CORE	ABS COLOR:IVORY	2	
③	LEVER	ABS COLOR:IVORY	1	
②	FRONT COVER	ABS COLOR:IVORY	1	
①	BACK COVER	ABS COLOR:IVORY	1	

大 廣 有 限 公 司 DA KOANG CO., LTD.

DRAW NO.		PRODUCT NAME	2151		
CUSTOMER			VIEW	TOLERANCE	
ITEM NO.				X. ±1.00 X.X ±0.50	
DRAWNBY	CHECKBY		APPOBY	UNTT	MM
			HanYongXia	Blatt-Nr.	1/1