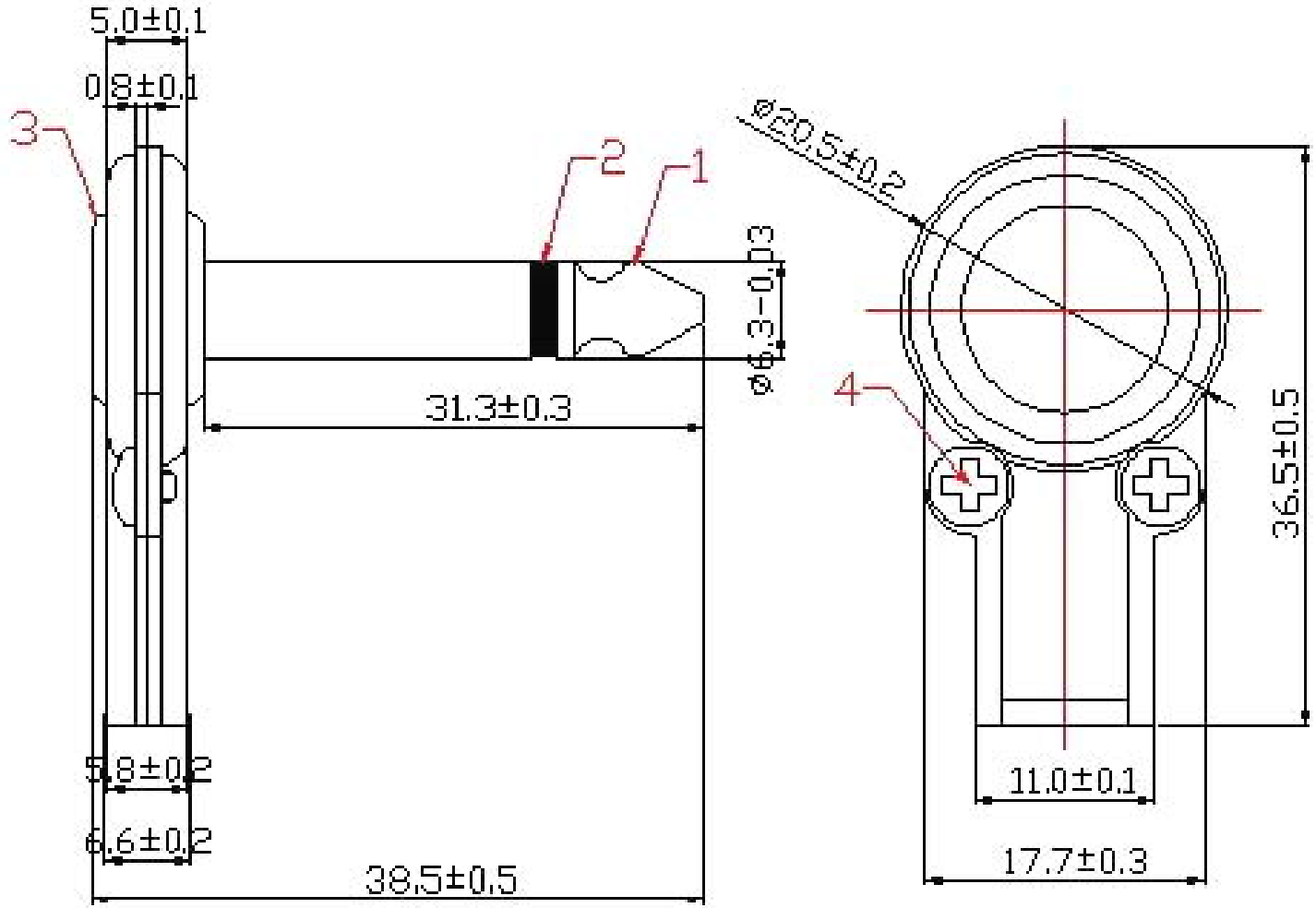

4	SCREW	Fe							
3	SHELL	Fe							
2	DIELECTRIC	POM		TOLERANCE	SIGNATURES		DATE	大 廣 有 限 公 司 DA KOANG CO., LTD.	
1	FRONT POINT	Zn			DRAFT: YangYangRui		08.12.20		
ITEM	DESIGNATION	MATERIAL			CHECKED: HuGangXue				
REV	PART NO.& SAMPLE NO.	DATE	BY		APPROVAL:			TITLE	1/4" Mono Plug,Right Angle Type W/Shielded Handle
A	1023			SHEET	SCALE	UNIT	REV		
B				OF	1:1	mm	ø	CUSTOMER	