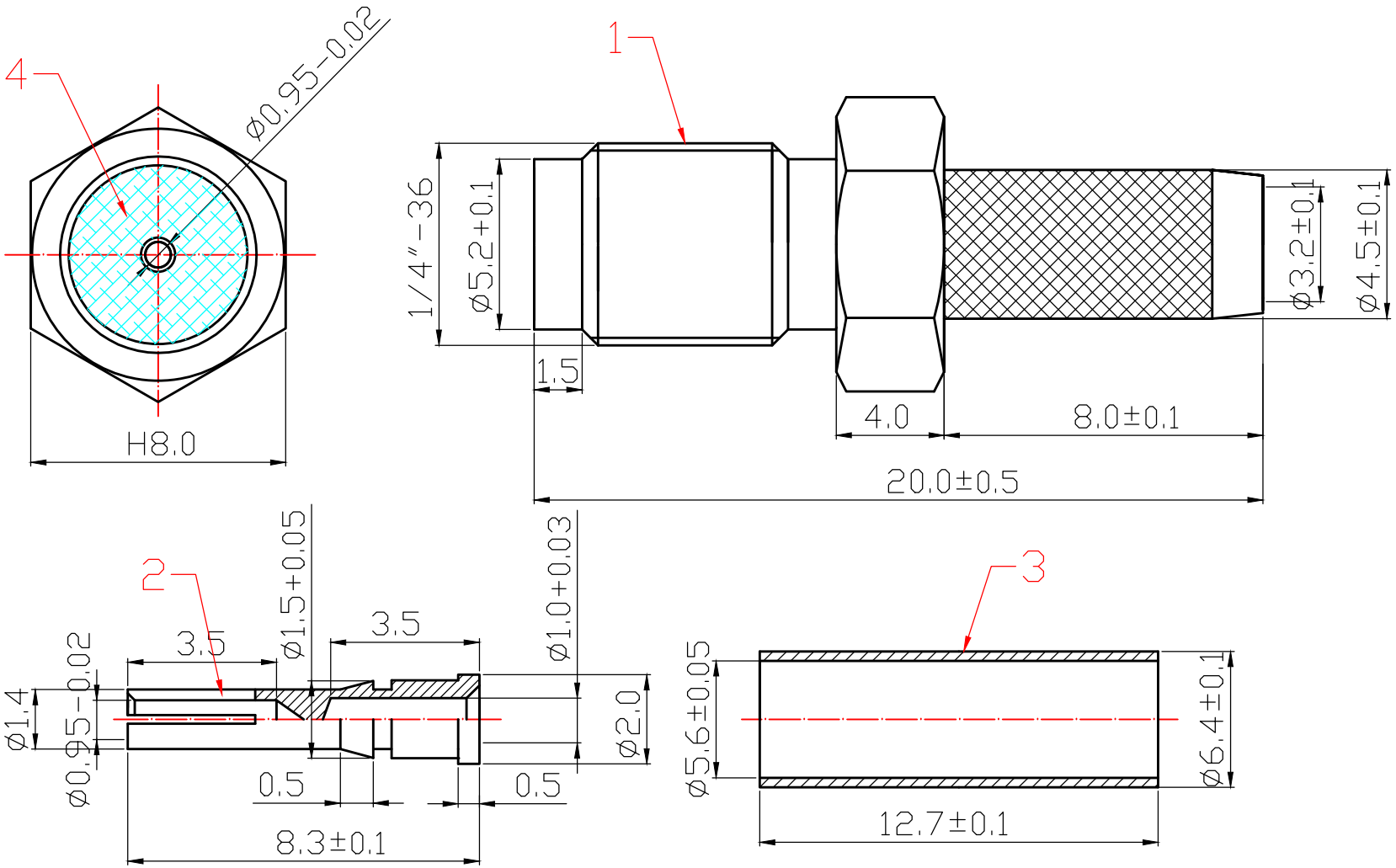

ITEM	DESIGNATION	MATERIAL
4	DIELECTRIC	TEF
3	COPPER TUBE	BRASS
2	PIN	BRASS
1	BODY	BRASS

TOLERANCE	
0 - 10	±0.05
10 - 99	±0.5
100 - 999	±10.0
1000 - 9999	±100.00
10000 - 99999	±1000.00

SIGNATURES	DATE
DRAFT: ZHOU XIN GUO	13-02-2012
CHECKED:	
APPROVAL:	

大 廣 有 限 公 司
DA KOANG CO., LTD.

REV.	ECO	PART NO.	DATE	BY
A0		1255		
B				

SHEET	SCALE	UNIT	REV.
OF	1:1	mm	ø

TITLE: SMA Female Crimp Type RG58U

CUSTOMER: