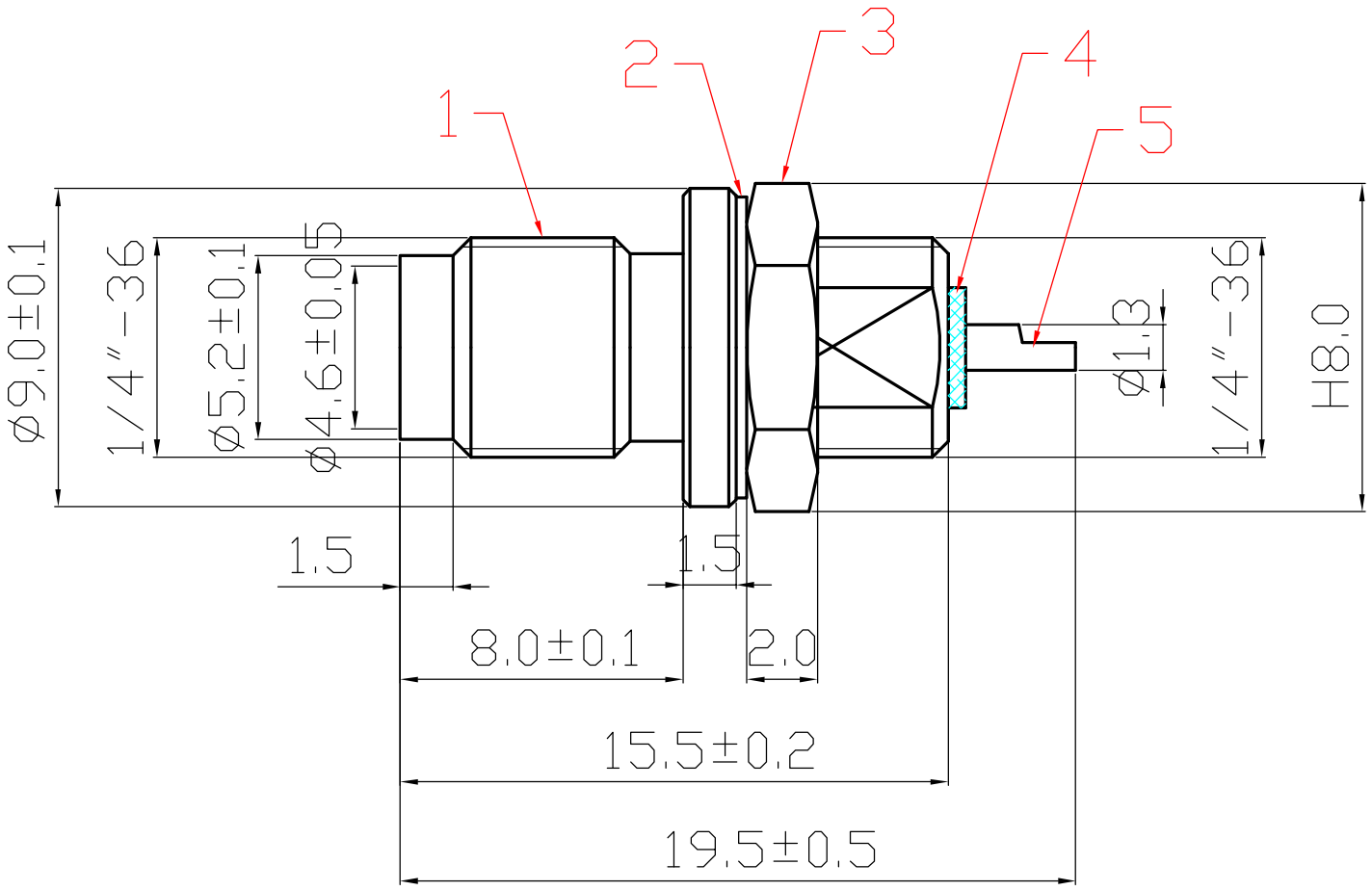

5	PIN	BRASS
4	DIELECTRIC	TEF
3	NUT	BRASS
2	WASHER	Fe
1	BODY	BRASS
ITEM	DESIGNATION	MATERIAL

REV.	PART NO.& SAMPLE NO.	BY
A	1256B	
B		

TOLERANCE	
0 - 10	±0.05
10 - 99	±0.5
100 - 999	±10.0
1000 - 9999	±100.00
10000 - 99999	±1000.00

SIGNATURES	DATE
DRAFT: ZHOU XIN GUO	30-11-2016
CHECKED:	
APPROVAL:	

SHEET	SCALE	UNIT	REV.
OF	1:1	mm	ø

大 廣 有 限 公 司
DA KOANG CO., LTD.

TITLE	SMA Female Bulkhead Gold Plated
CUSTOMER	