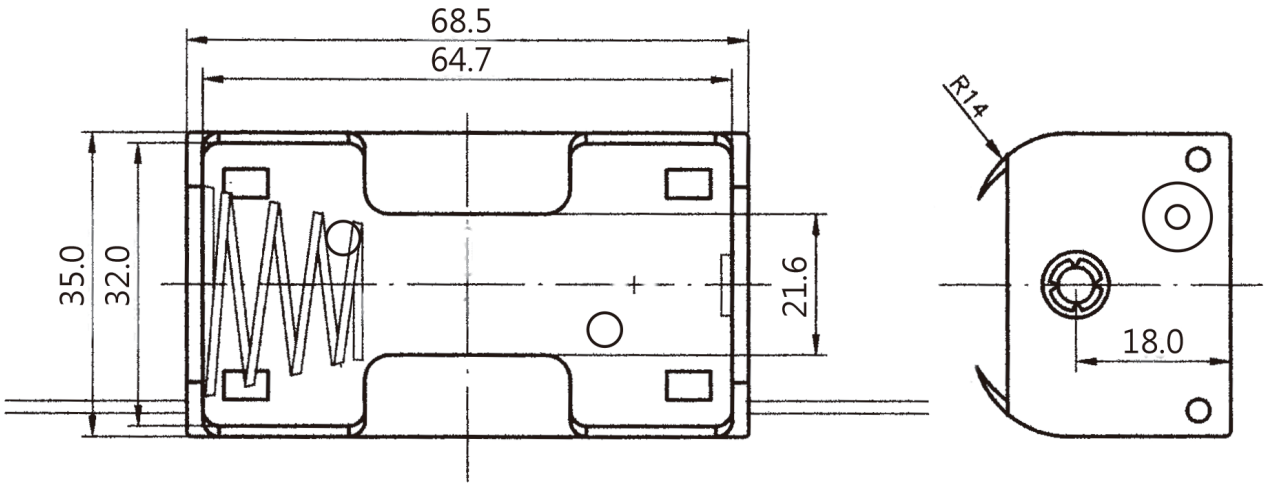

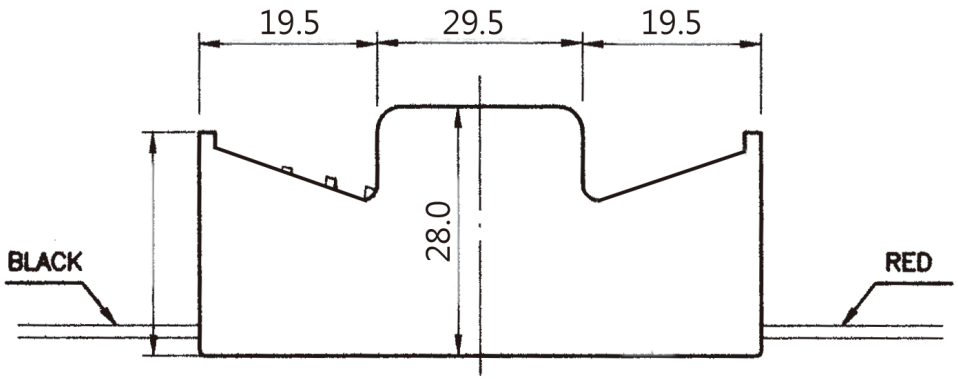

SPECIFICATION

(1) ITEM NO.: 3428

(2) WIRE: UL1007 AWG#26
BLACK & RED 150MM±5MM
STRIP & TIN 3MM±1MM

(3) MATERIAL: P.P. RESIN,
BLACK COLOR

(4) SPRING: 0.8 MM 65C SPRING
WIRE/ ANA: 0.9 MM

NO.	MODIFICATION	DATE
3		
2		
1		

THIRD ANGLE PROJETION

大 廣 有 限 公 司 DA KOANG CO., LTD.

NAME	BATTERY HOLDER 3428		
SCALE	1:1	APPD.	K. Hwang. 11/22
UNIT	MM	CHKD	Huang Yong Lian
MAT'L	P.P.	DWN.	LING
DATE	NOV.22.2000	DR NO	1111A-1100