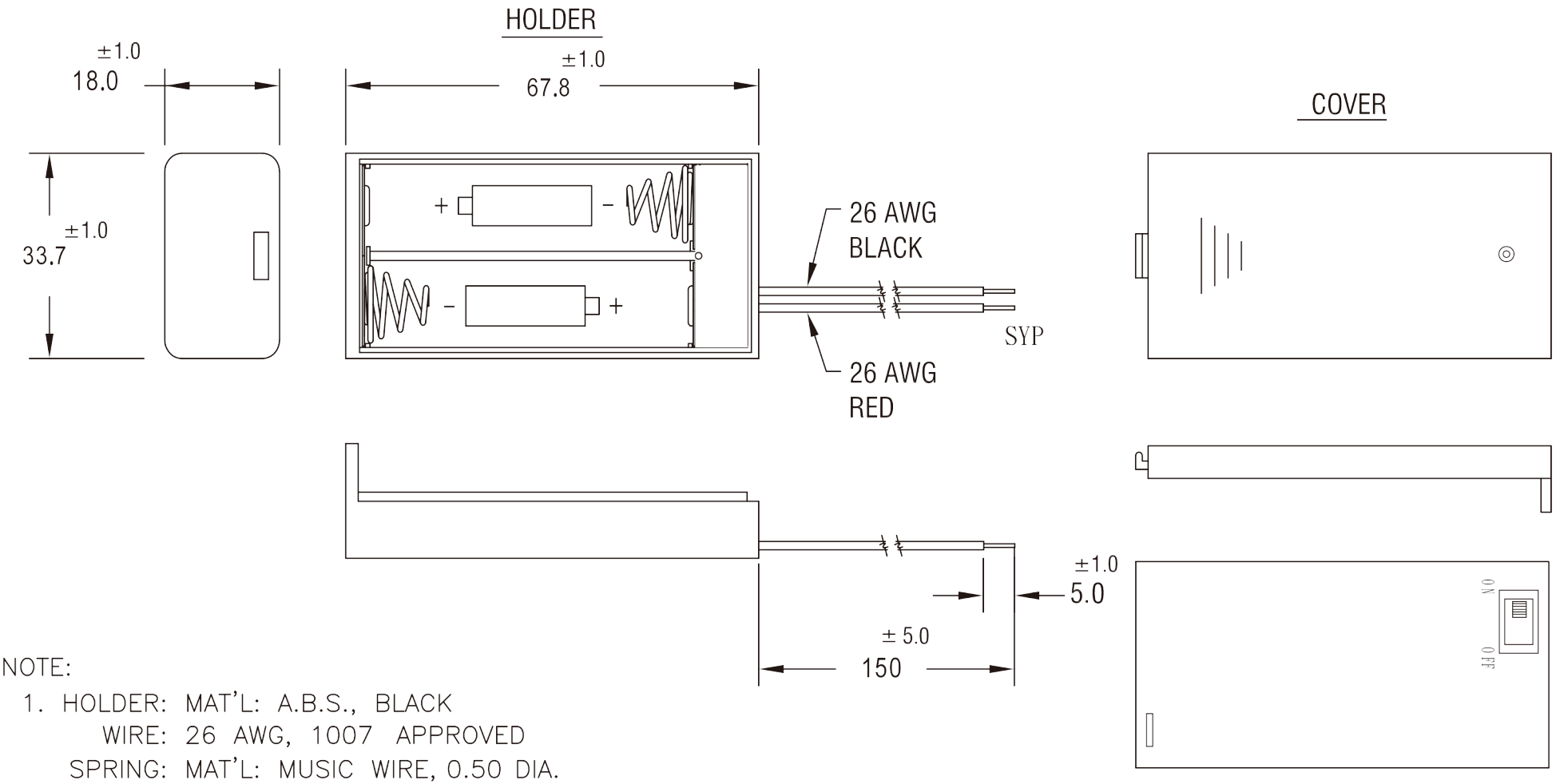

NOTE:

1. HOLDER: MAT'L: A.B.S., BLACK
   WIRE: 26 AWG, 1007 APPROVED
   SPRING: MAT'L: MUSIC WIRE, 0.50 DIA.
   FINISH: NICKEL PLATE

REV.	SCALE	UNIT
1.0	1X	mm

TOLERANCES	
DECIMAL	± 0.3
ANGULAR	± 1^0

DRAW	APPROVAL	COLOUR
JINZHI	GWEN	SILVERY

ALSO ACCEPTS	MATERIAL	ABS
AA	FINISH	BLACK

COATING PARAMETERS	TEMPERATURE RANGE	VOLTAGE PARAMETERS
UL 94V-HB	- 40^0C ~ 80^0C	270V

PART NAME	PART NO
BATTERY HOLDER	3446

RoHs 环保

大 廣 有 限 公 司 DA KOANG CO., LTD.