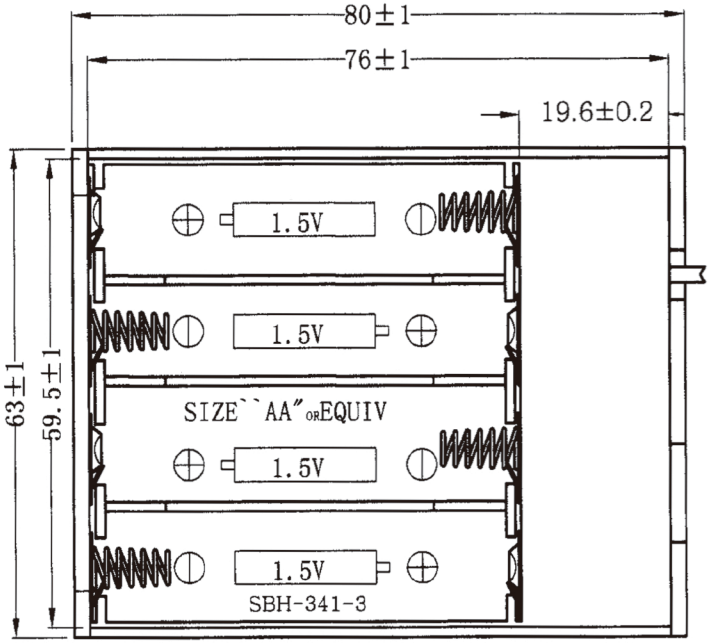

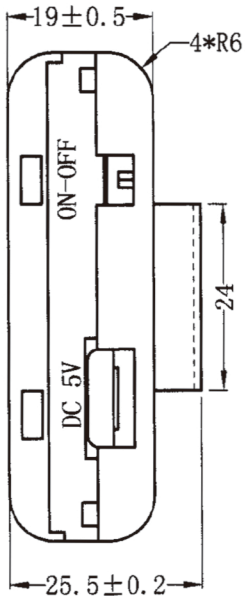

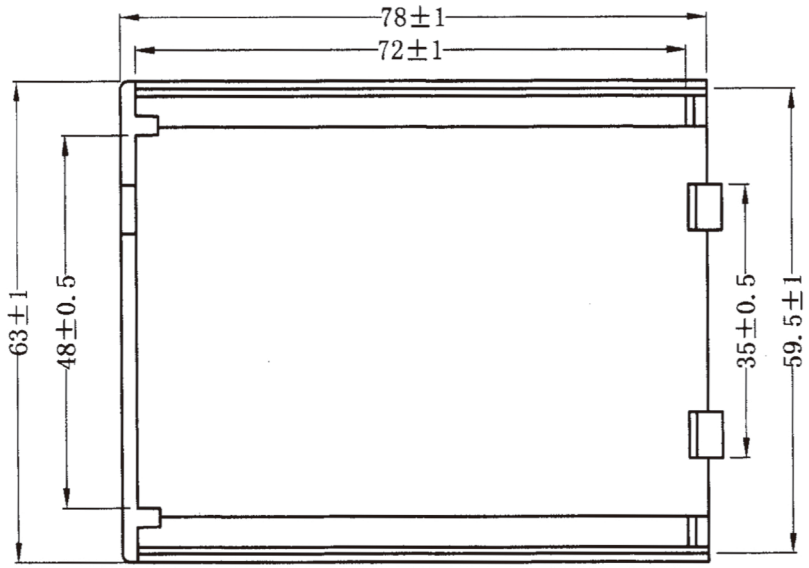

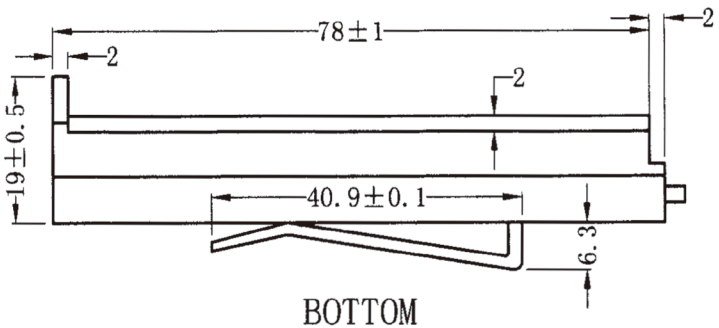

BOTTOM

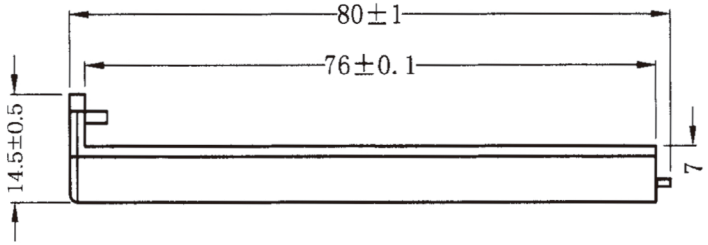

COVER

SPECIFICATION

(1) ITEM NO: 3449
(2) VOLTAGE: DC OUTPUT 5V USB-A-01
A DIODE NEED TO BE ADDED
ON POSITIVE
(3) MATERIAL: ABS RESIN BLACK COLOR
(4) SPRING: 0.6MM 65C SPRING WIRE
(5) SWITCH: SK13D01V5

NO.	MODIFICATION	DATE
3		
2		
1		

THIRD ANGLE PROJETION

大 廣 有 限 公 司 DA KOANG CO., LTD.

NAME	BATTERY HOLDER: 3449		
SCALE	1:1	APPD	11/28.05
UNIT	MM	CHKD	11/28.05
MAT'L	ABS	DWN	WCC
DATE	NOV. 08. 2005	DR NO	S3413S/USB-1105