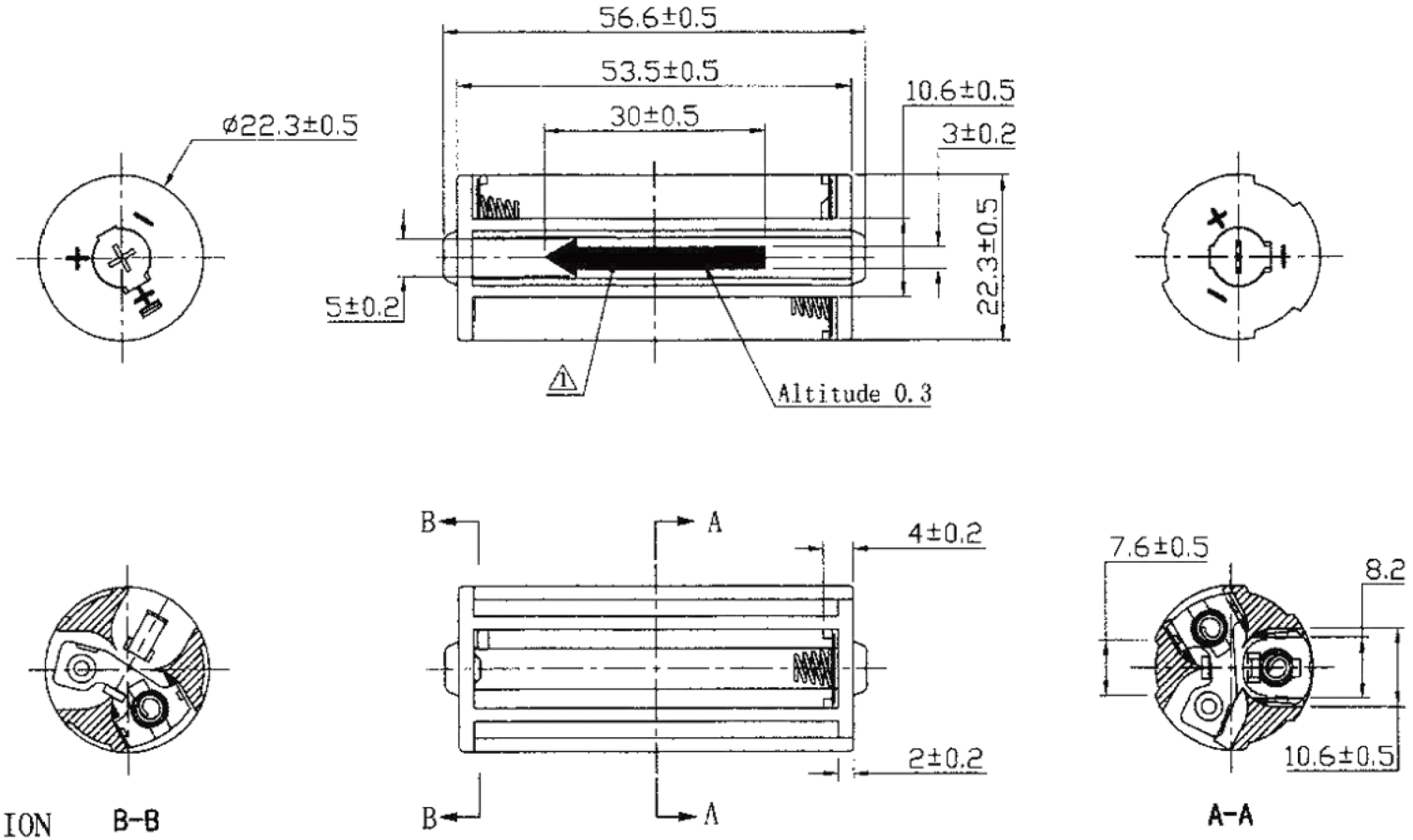

SPECIFICATION

(1) ITEM NO: 3455A

(2) MATERIAL: ABS. RESIN, BLACK COLOR

(3) CONTACT: 407# CONTACT

BRASS NICKLE PLATED

(4) SPRING: 0.5MM 65C SPRING WIRE

(5) ROHS COMPLIANT

NO.	MODIFICATION	DATE
3		
2		
1	Increase arrowhead sign	03.31.07

THIRD ANGLE PROJETION

大 廣 有 限 公 司 DA KOANG CO., LTD.

NAME	BATTERY HOLDER 3455A		
SCALE	1:1	APPD	
UNIT	MM	CHKD	
MAT' L	AS SPEC.	DWN	HUHONGWEI
DATE	MAY. 27. 2005	DR NO	