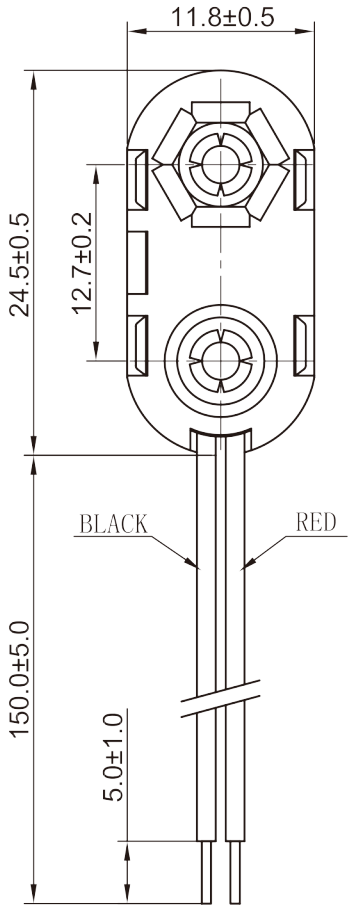

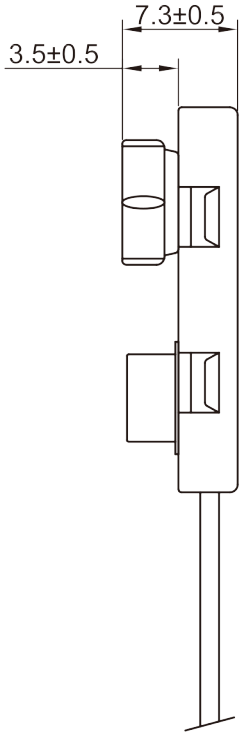

SPECIFICATION

(1) ITEM NO.: 3465A

(2) WIRE: UL 1007 AWG 26

BLACK & RED : 150MM±5MM

STRIP & TIN : 5MM±1MM

(3) SNAP MATERIAL: ABS RESIN, BLACK COLOR

(4) WITH 6 PRONG SNAP TERMINALD, BRASS NICKEL PLATED

NO.	MODIFICATION	DATE
3		
2		
1		

General Tolerances			
0 ~ >3	± 0.10	30 ~ >120	± 0.30
3 ~ >6	± 0.10	120~ >400	± 0.50
6 ~ >30	± 0.20	Angle: ± 3°	

The Third Angle Projection

大 廣 有 限 公 司 DA KOANG CO., LTD.

NAME	BATTERY SNAP: 3465A		
SCALE	2:1	APPD	
UNIT	MM	CHKD	
MAT'L	SEE SPEC.	DWN	Rao xianhui
DATE	MAY. 28. 2019	DR NO	IR1A-0519A